watts

TRUCK & TRAILER APPLICATIONS

2016

1973-2016

In 1973, Watts Transport Spares was a small family business founded by John Watts. It was during this time John built a reputation that promised to give his customers quality products and a high level of service and value to match. As we reach our 40th birthday, it's fair to say we kept that promise.

Watts Friction Plus Australasia as we are known today still embrace this philosophy that's turned us into one of the major suppliers of trailer components, brake foundation & brake friction products throughout Australia & New Zealand.

To celebrate our milestone and the new look to the Watts brand, new products and loyalty rewards programs, we continue to support our distributor network, our customers'

This means we will have more quality products in our comprehensive product portfolio and to identify the features & benefits of each product.

We're excited about this milestone and continue to deliver the promise for quality products and customer service which our competitors cannot match.

That's what we're known for – QUALITY/SERVICE

watts

WATTS IN THE BOX

IT COMES TO A POINT WHERE YOU NEED TO ASK YOURSELF... WATTS IN THE BOX

CONTENTS

Alphabetical Index	4-5
Watts Loyalty Rewards Program	6-7
Axle Drawing - Exploded View	9-31
Brake Hardware	32-39
Brake Shoe Kits	40-45
Brake Shoes - Unlined	46-55
ABS Sensors	56-61
Disc Rotor & Disc Pad Application	62-67
Disc Rotor - Schematic Drawings	68-69
Disc Pad Profiles Drawings	70-82
Disc Pad Wear Sensors	83
Camshaft Application List	84-95
Camshaft Quick Reference Guide	96-99
Camshaft Numerical List	100-107
Camshaft Components	108-119
Slack Adjusters - Manual/ABA	120-127
Brake Chambers - Drum & Disc	128-133
Air Springs - Trailer Applications	134-143
Shock Absorbers - Trailer Applications	144-145
Equaliser Rockers	146-149
Torque Rod & Equaliser Pins & Bushes	150-157
Wheel End Parts	158-167
Wheel Spacers	168
Fifth Wheel Disc Kits	168
Ringfeeder - Major Repair Kits	169
Draw Bar Bushes	169
Cross Reference List	171-185
Recommended Stockist List	186-187
Metric Conversion Table	188
Warranties	189

ALPHABETICAL INDEX

A

	PAGE
ABS Sensor	58-61
Air Springs (Air Bags)	136-137
Air Spring - Schematics Drawings	131-133
Anchor Pin Bushes	38
Anchor Pin Support Washers	38
Anchor Pins	38
Automatic Slack Adjusters	124
Axle Drawings - Schematics	9-31
Axle Hub Assemblies	167
Axle Nut Kits	160-162
Axle Nuts	160-162
Axle tab Washers	160-162
Axle Seals	163-164

B

Blacktech - Air Springs	136-137
Brake Chamber - Booster	131-133
Brake Chambers - Disc Brake	131-133
Brake Chamber - Schematic Drawings	131-133
Brake Hardware Kits	34-35
Brake Shoe Kit Assembly	44-45
Brake Shoes - Unlined	47-55
Brake Rollers	38-39
Bremsbelage Disc Pads	65
Bremsbelage Disc Rotors	66
Bushes, Anchor Pin	38-39
Bushes - Draw Bar - Tow Eye	169

C

	PAGE
Camshafts	84-107
Camshaft Components	108-119
Camshaft Bush Repair Kits	117-119
Camshaft Bushes	112-116
Camshaft Roller Retainers	111
Camshaft Rollers	39
Camshaft Repair Kits	117-119
Camshaft Seals	115-116
Camshaft Spacers	114
Camshaft Washers	115
Camshaft Washer & Circlip Kits	114-115
Cam Tubes	108
Conversion Table - Imperial/Metric	188
Cross Reference List	170-185

D

Disc Brake Chambers	133
Draw Bar Bushes - Tow Eye	169
Disc Pads	65
Disc Pad Specification Profiles	70-82
Disc Pad Wear Sensors	83
Disc Rotors	66
Disc Rotor & Disc Pad Axle Kits	66
Disc Rotor Specification Schematics	68-69

E

End beam bushes	155
Equaliser/ Pins/ Nuts/ Washers	155-157
Equaliser Bushes	153-157
Equalisers	146-149

F

	PAGE
Fifth Wheel Spacers	168
Fifth Wheel Kits	168

H

Hub Assemblies	167
Hub Cap Window Kits	162-163
Hub Caps	162-163

P

Pivot Pin - Assemblies	155
Pivot Pin - Bushes	154

R

Retainers - Cam Roller	39
Return Springs	36-37
Rim Clamps	166
Rocker Bushes	153-157
Rockers	148-149
Rollers	39
Recommended Stock List	186-187
Rewards Program - Redemptions	6-7
Ringfeeder - Major Repair Kit	169
Ringfeeder - Main Pin & Spring Kit	169

S

S Cams	84-95
Seals - Hub	163-164
Shock Absorbers	145
Slack Adjuster Return Spring	36
Slack Adjusters, Automatic	124

	PAGE
Slack Adjusters, Manual	120
Spring Brake Chambers	131-133
Springs, Return	36-37
Support Washers	38
Suspension Bushes - Poly Urethane	152
Suspension - End Beam Bush	155
Suspension Equaliser Pin Assemblies	155
Suspension Equaliser Bushes	155
Suspension - Pivot Pin Assembly	155
Suspension Torque Rod Pin Assemblies	157
Suspension Torque Rod Bushes	157

T

Tow Eye - Draw Bar Bushes	169
Torque Rod Bushes	153-157
Torque Rod Pin Assemblies	155-157

U

Urethane - Poly Bushes	152
Unlined Brake Shoe	47-55

W

Wheel Clamps	166
Wheel End Components	158
Wheel Hub Assemblies	167
Wheel Nuts	164-165
Wheel Studs	164-165
Wheel Spacers	164-165
Watts Rewards Program	168
Watts - Suspension Bushes	152-157

ALPHABETICAL INDEX

WATTS LOYALTY REWARDS PROGRAM

watts

Our Loyalty Rewards program is an incentive for our customers to benefit from their loyalty when using the Watts brand. The program is simple and requires little of no effort by you.

Start collecting the Watts Loyalty Rewards card in every product we sell and redeem them for tool kits.

How simple is that, just go to www.wattsfpa and follow the link for more details on how you too can be rewarded everyday you fit our quality products.

START COLLECTING TO RECEIVE YOUR LOYALTY REWARDS GIFT

AXLE DRAWINGS - EXPLODED VIEW

	PAGE
BPW - Transpec New Generation 420mm x 180mm Brakes Brake 95 - 420mm x 180mm Brakes KH/KR Trailer Axle (19.5') 360 x 200 Brakes	9-10
EATON ESII (extended service) 16 1/2" x 6" Brakes ESII (extended service) 16 1/2" x 7" Brakes	11
FRUEHAUF Propar Axle with 16 1/2" X 7" XEM Trailer Axle with 161/2" x 7" Brake	12-13
FUWA-KHITCH TP & TN Axles - Drum Brake TN Axles - Disc Brake	12-14
HENDRICKSON Intraax Trailer Axle with 16 1/2" x 7" & 16 1/2" x 8-5/8" Brakes Intraax Trailer Axle with Disc Brake - Conmet Alloy Hubs	15-17, 28
MERITOR/ROCKWELL Drive & Steer Axles with GP,"QC" & "Q Plus" Series 15" & 16 1/2" x 7" Drive & Steer Axle with Disc Brake	18-19, 23
RUBERY OWEN/ROR BMX axle 350X200 dia BMX axle 420X180 dia BMX axle with Disc Brake	20-23
SAF RZ10242 & RZ12242 Intradisc Suspension SK RS/RZ 9019W & SK RB 9019W Axles with Wabco Calipers Disc Brakes J-Series Axles (RZ 12242/18C & RZ 10242/18C) with 420mm x 180mm S-Cam Brakes	24-25, 29
TMC Drum Brake Axle with 16 1/2" x 7" Brakes Disc Brake Axle	12-14
YORK 2782 & 2784 Trailer Axles with 16 1/2" x 7" Brakes 2950 Trailer Axle (19.5") with 335mm x 210mm Brakes Tecair FB VRH - Suspension Tecair 1&2 - Suspension Disc Brake Axle	26-27, 30-31

BPW Brake 95 & New Generation Axle

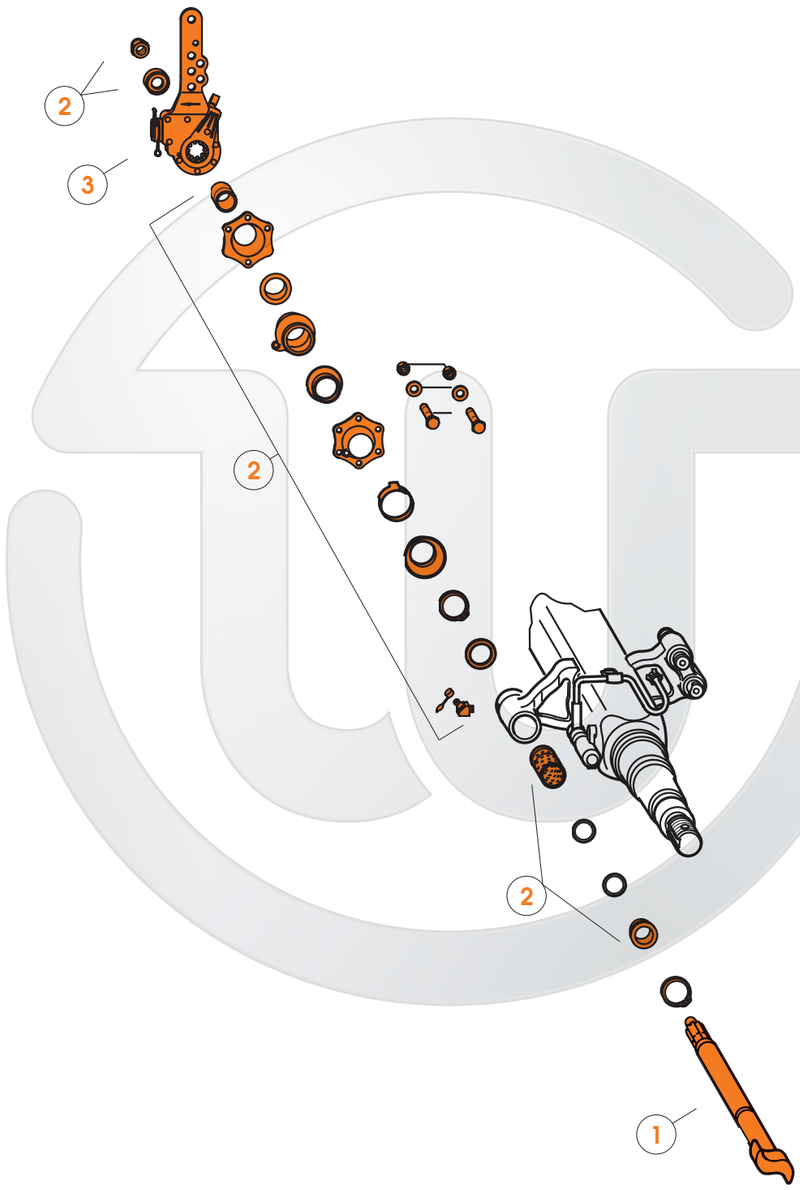

Item	Description	Page
1	Camshaft Assembly	90, 91
2	Camshaft Repair Kit	118
3	Slack Adjuster	122, 124

BPW Brake 95 & New Generation Trailer Axle

420mm x 180mm S Cam Brakes

360mm X 200mm S Cam Brakes

420mm X 200mm S Cam Brakes

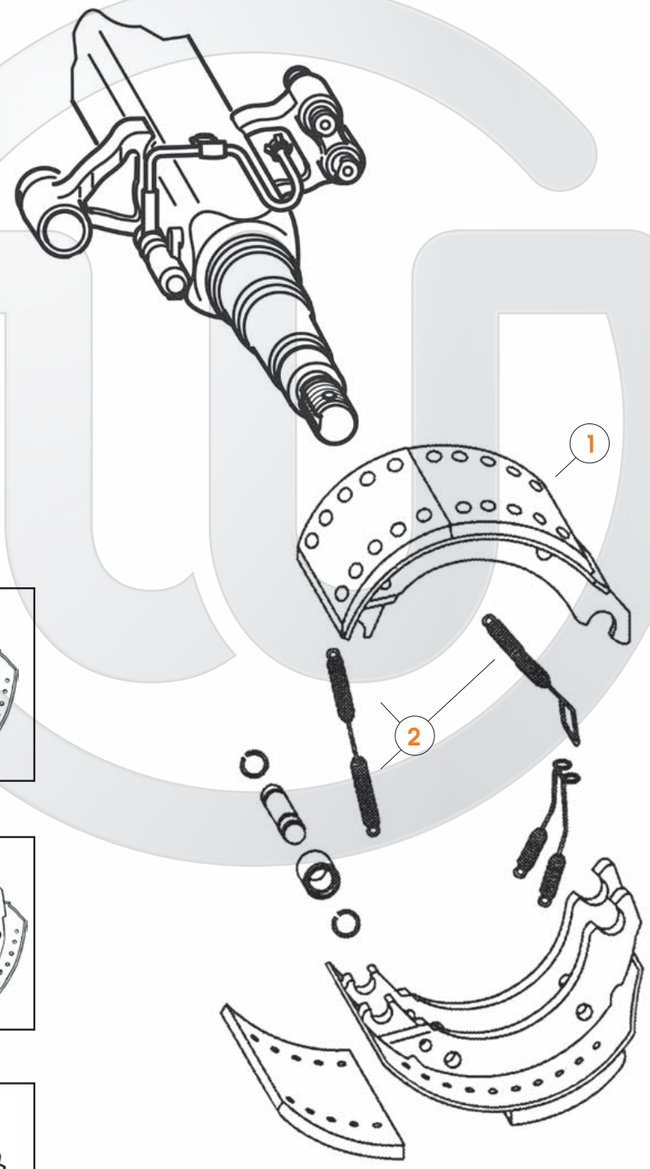

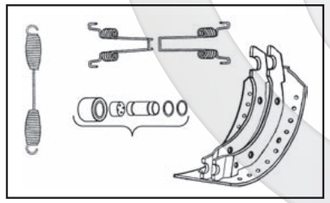

BRAKE 95 - 420X180

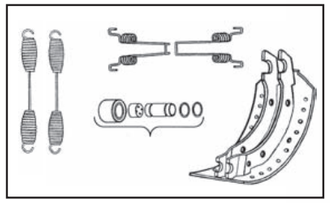

BRAKE 95 - 360X200

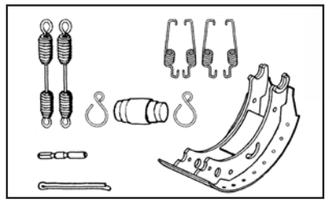

NEW GENERATION 420X180

Item	Description	Page
1	Brake Shoe Kit	44, 45
2	Brake Hardware Kit	35

EATON ESII Extended Service

Truck Drive/Steer Axle

16 1/2" X 7" S Cam Brakes

16 1/2" X 6" S Cam Brakes

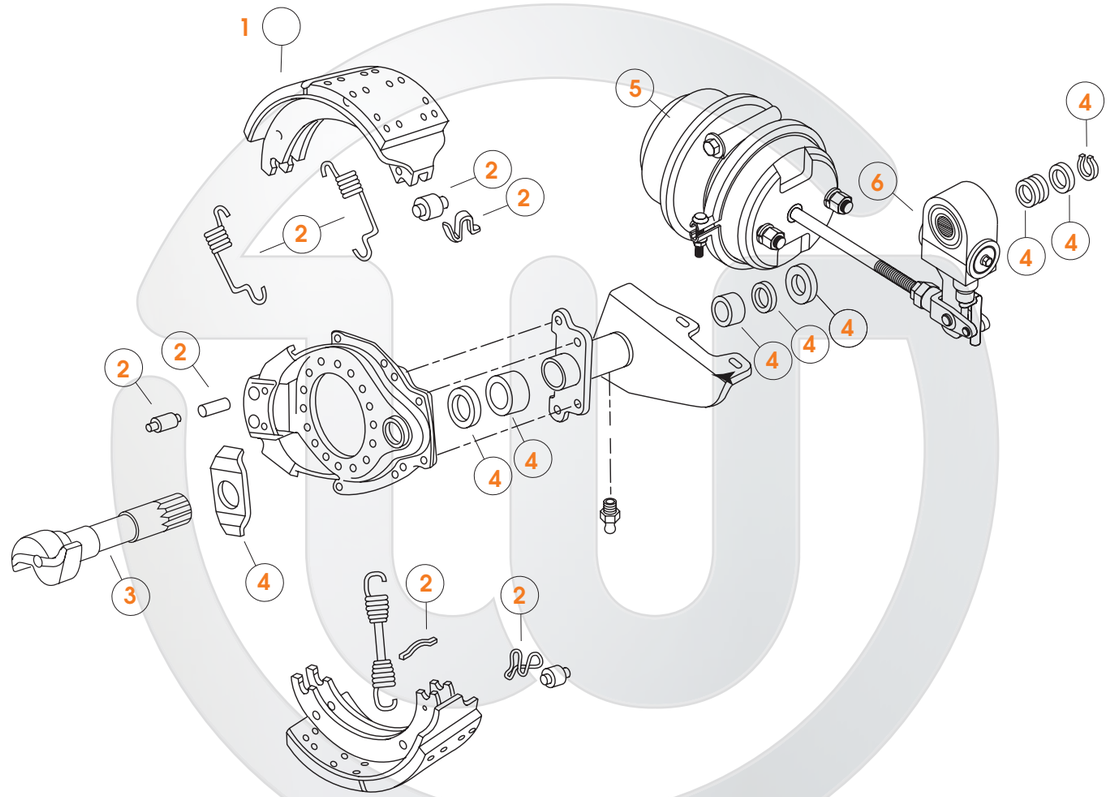

Item	Description	Page
1	Brake Shoe Kit	44
2	Brake hardware kit	35
3	Head Camshaft	86
4	Camshaft Repair Kit	N/A
5	Brake Chamber	131
6	Automatic Slack Adjuster	122, 124

FRUEHAUF Propar Trailer Axle - Tapered bearing

16 1/2" X 7" S Cam Brakes

Includes KHitch, TMC (TN) Axle

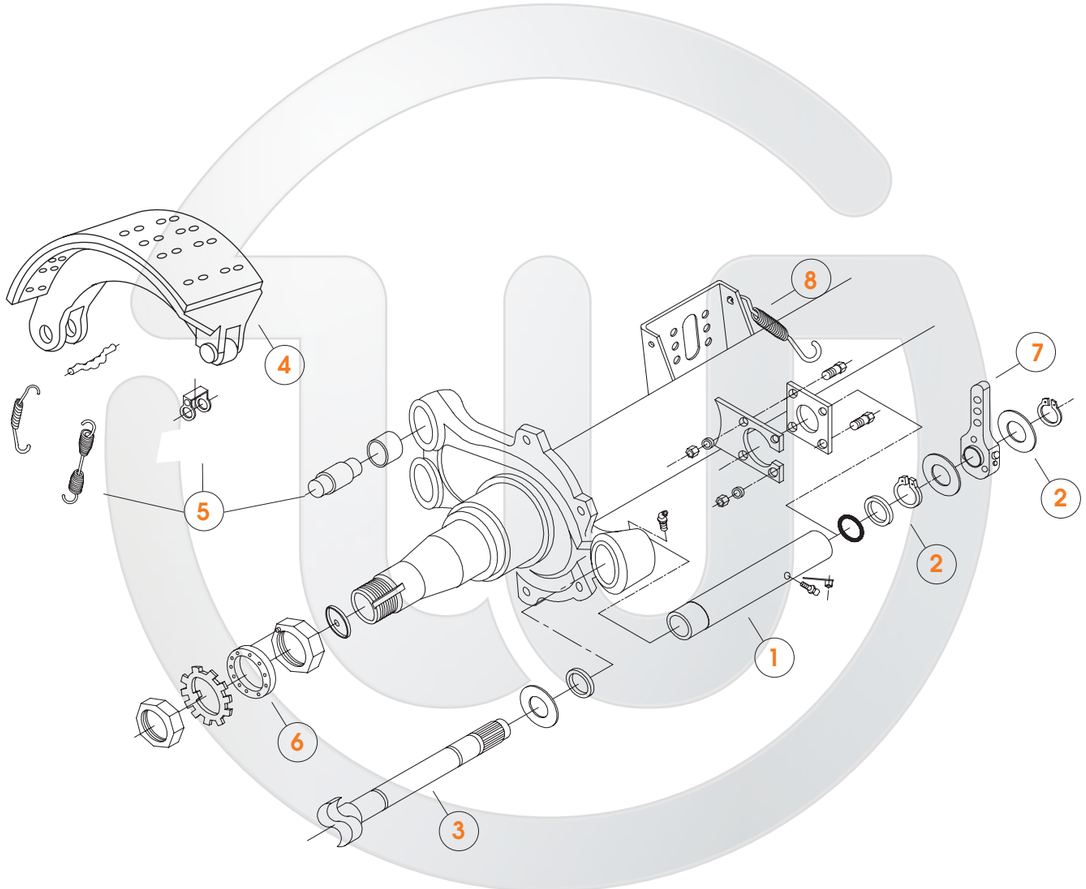

Item	Description	Page
1	Camtube	110
2	Camshaft Kit	117
3	Camshaft	94
4	Brake Shoe	44
5	Brake Hardware Kit	34
6	Axle Nut Kit	160
7	Slack Adjuster	124
8	Slack Adjuster Return Spring	36

FRUEHAUF XEM3 Trailer Axle - Parallel bearing

16 1/2" X 7" S Cam Brakes

Includes KHitch, TMC (TP) Axle

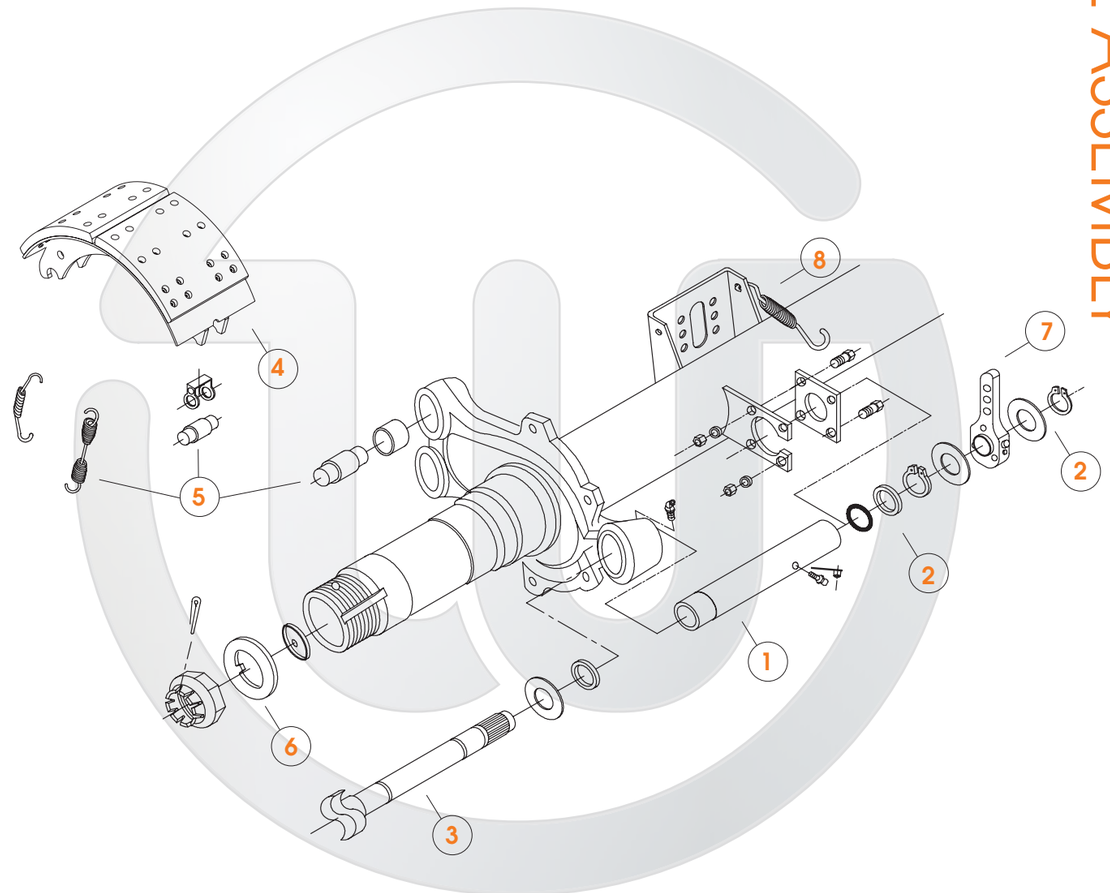

Item	Description	Page
1	Camtube	110
2	Camshaft Kit	117
3	Camshaft	94
4	Brake Shoe	44
5	Brake Hardware Kit	34
6	Axle Nut Kit	162
7	Slack Adjuster	124
8	Slack Adjuster Return Spring	36

FUWA KHitch, TN Disc Assembly - 196 PCD, 8 Stud

Also suits TMC, York

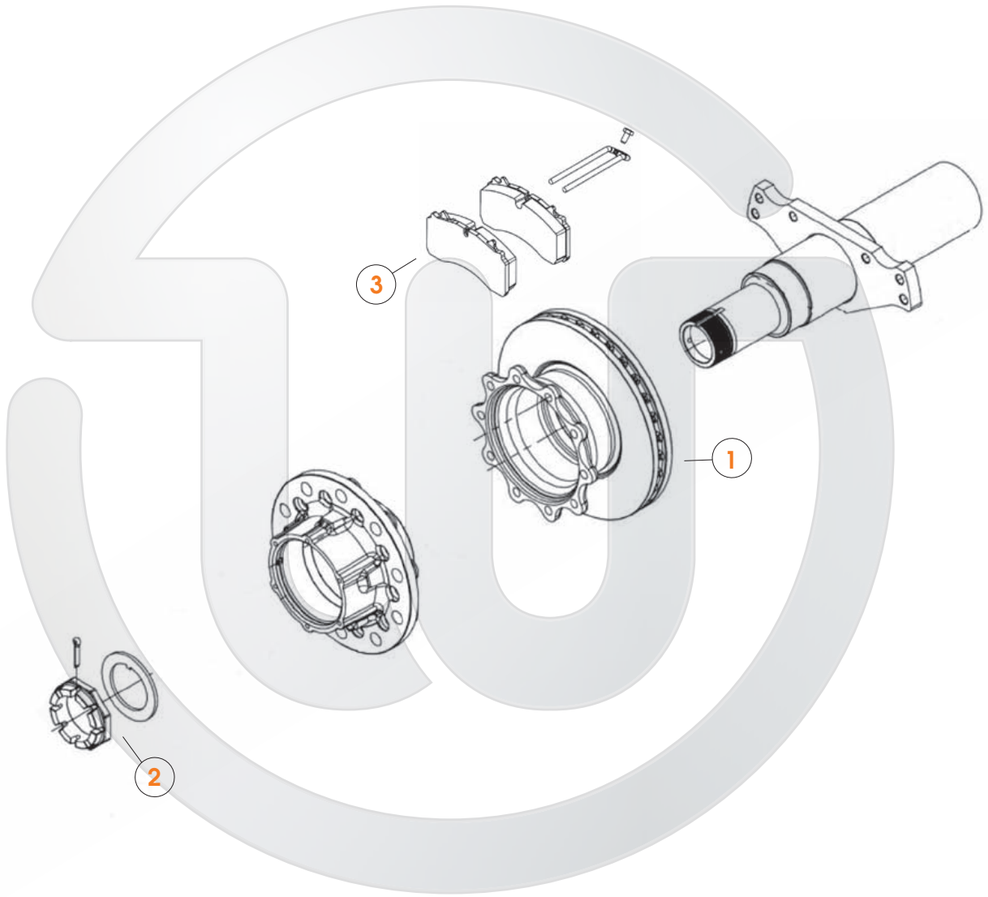

Item	Description	Page
1	Disc Rotor with Cap Screws	66
2	Axle Nut Kit	162
3	Disc Pad Set	65

HENDRICKSON 23K, 25K, 30K, AAEDT & AANT, Intraax

Camshaft & Cam Tube Assembly

Brake Chamber & Slack Adjuster Assembly

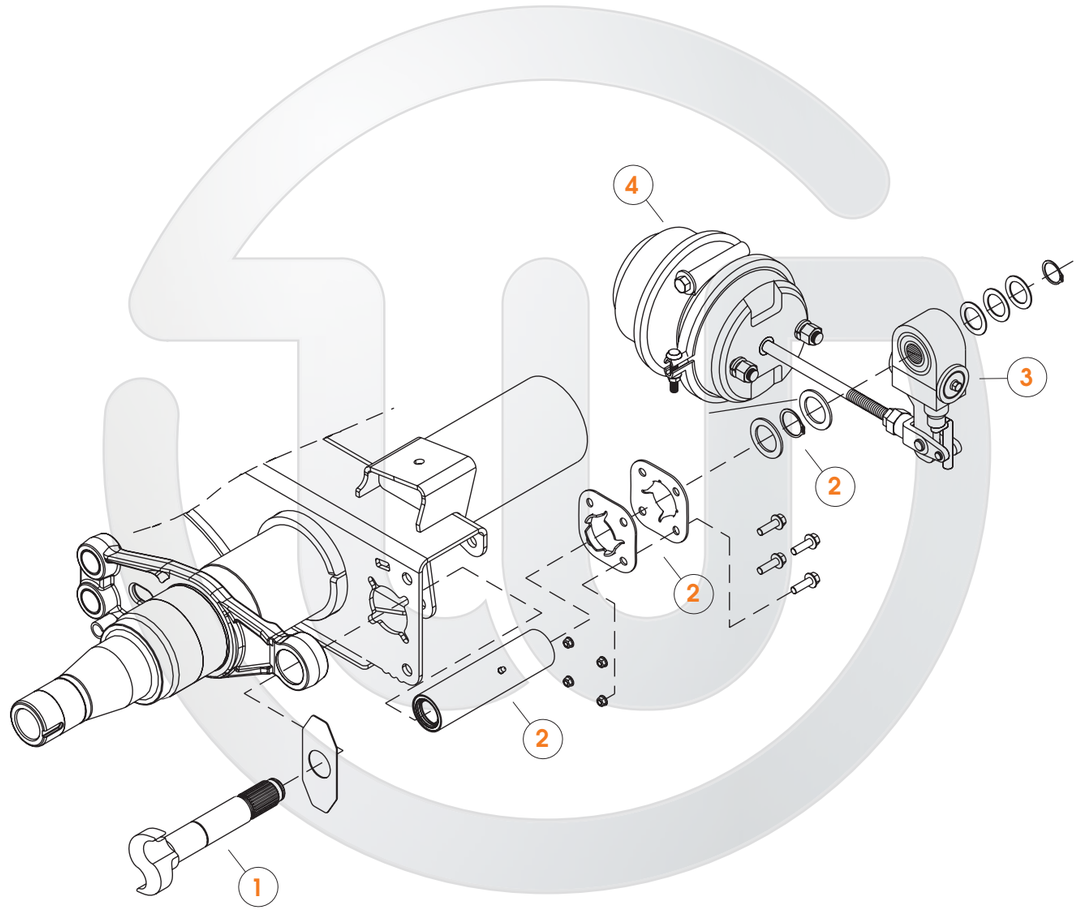

Item	Description	Page
1	Camshaft Assembly	92
2	Cam Tube Assembly	110
3	Manual & Aba Slack Aduster	122-124
4	Brake Chamber Assembly	131

HENDRICKSON Intraax Disc Brake - 430mm Dia

Standard Hub & Conmet Alloy Hub Types

Knorr Bremse SB7, SN7 & SK7 Calipers

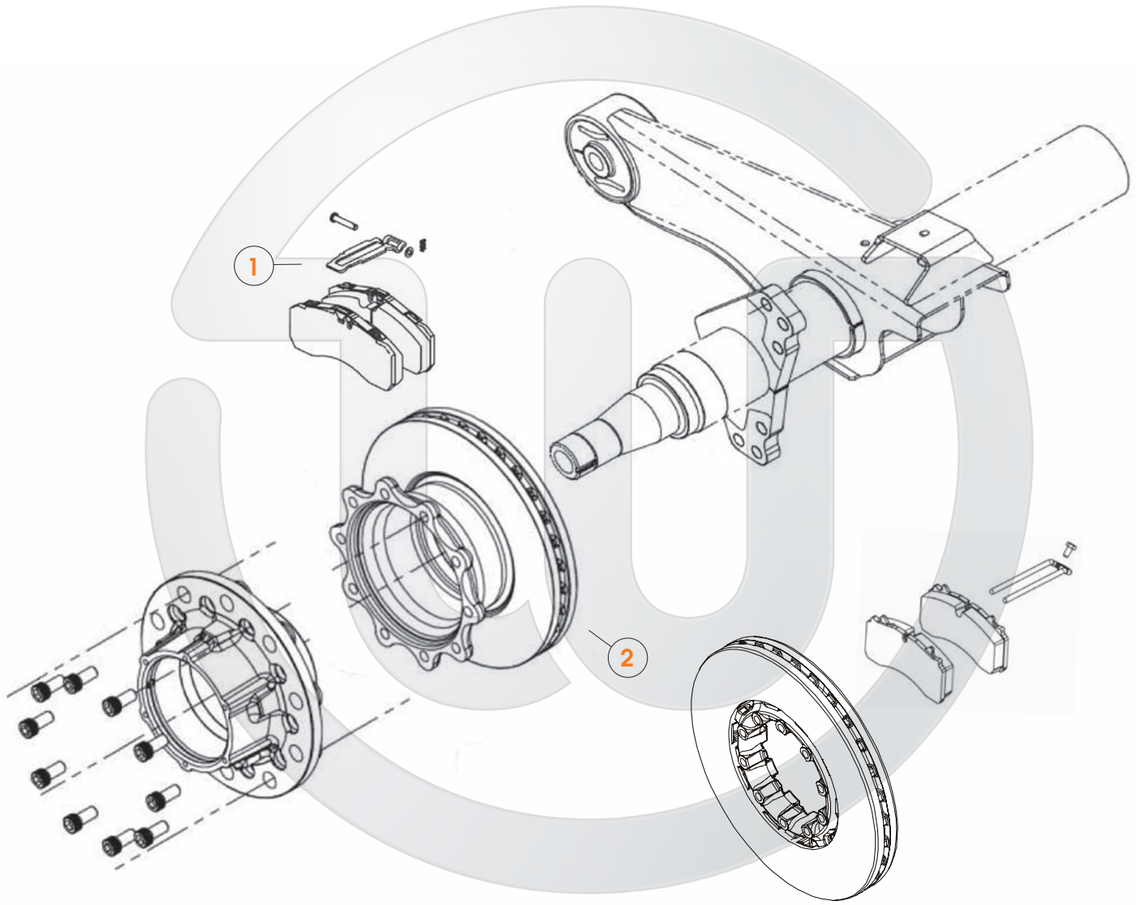

Item	Description	Page
1	Disc Pad	65
2	Disc Rotor	66

HENDRICKSON - Meritor

SUITS: 23K, 25K, 30K, AAEDT & AANT

16 1/2" X 7" S Cam Brakes

16 1/2" X 8 5/8" S Cam Brakes

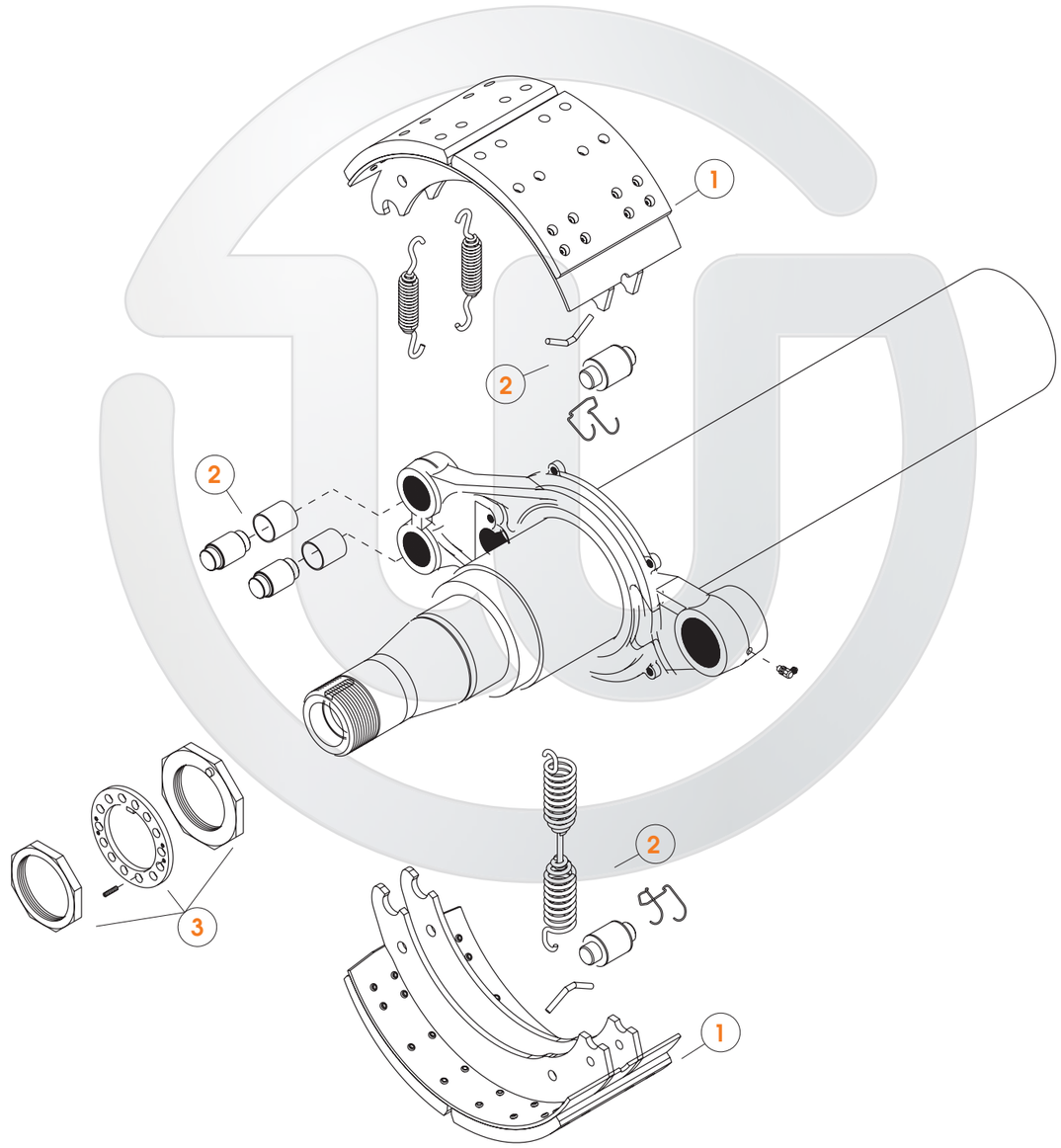

Item	Description	Page
1	Brake Shoe Kit	44
2	Brake Hardware Kit	35
3	Axle Nut Kit	160

MERITOR - General Purpose "P" Type

Truck Drive/Steer Axle

16 1/2" X 7" S Cam Brakes

16 1/2" X 6" S Cam Brakes

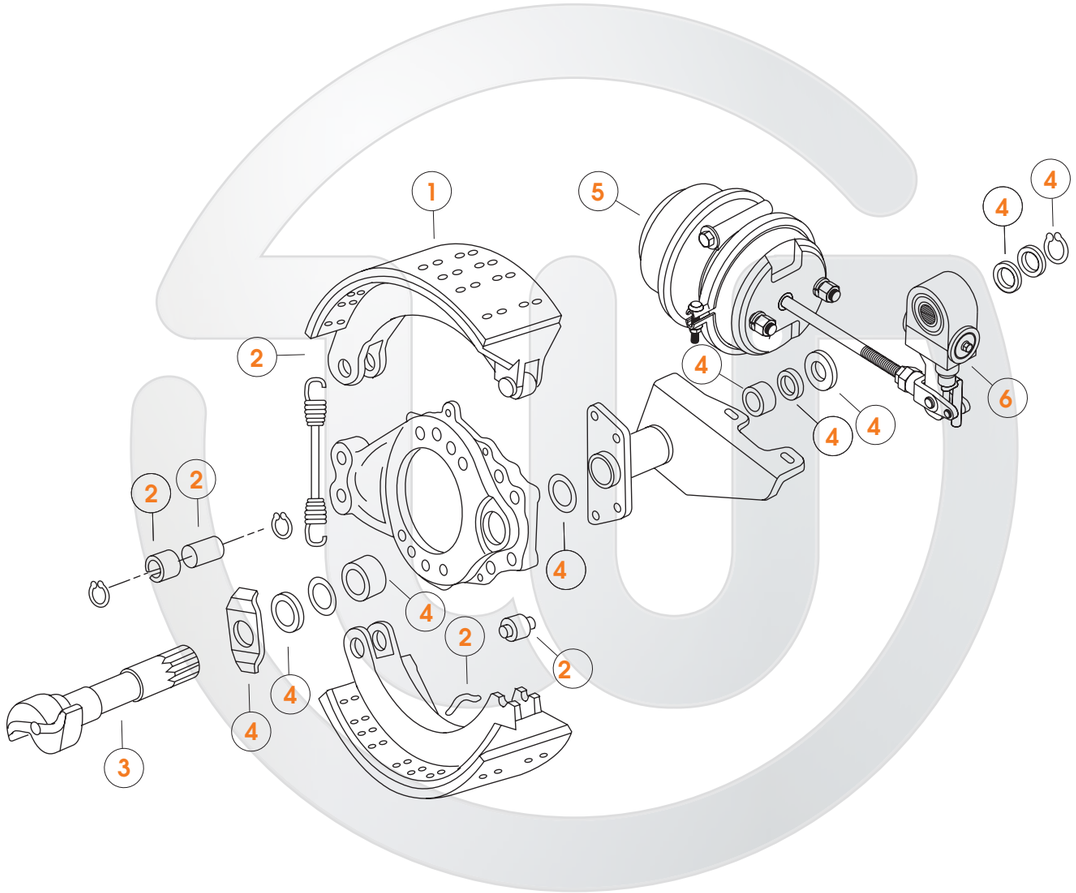

Item	Description	Page
1	Brake Shoe Kit	44
2	Brake hardware kit	34
3	Camshaft	86, 90, 92
4	Camshaft Repair Kit	119
5	Brake Chamber	131
6	Automatic Slack Adjuster	122, 124

MERITOR - Quick Change & Q Plus

Truck Drive/Steer Axle

16 1/2" X 7" S Cam Brakes

16 1/2" X 6" S Cam Brakes

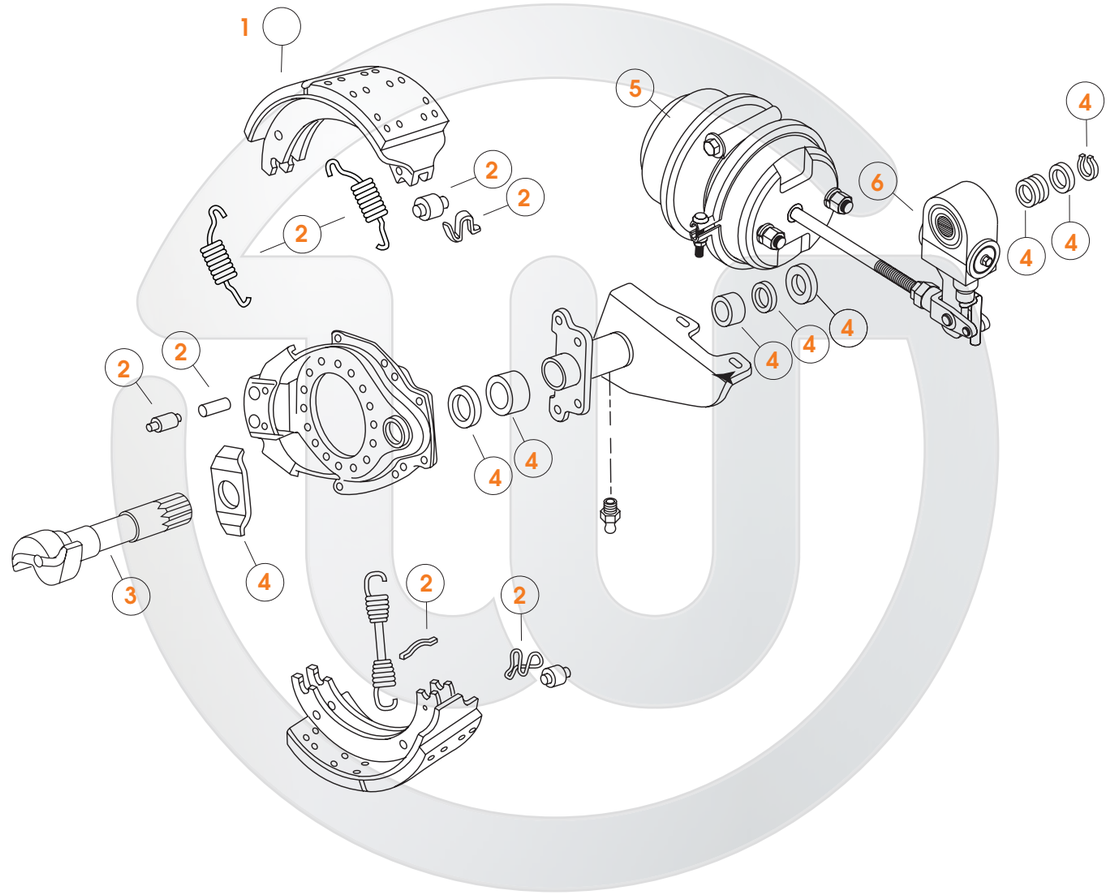

Item	Description	Page
1	Shoe and Lining Assembly	44
2	Brake hardware kit	34
3	Camshaft	86, 90, 92
4	Camshaft Repair Kit	119
5	Brake Chamber	131
6	Automatic Slack Adjuster	122, 124

ROR/RUBERY OWEN BMX TRAILER AXLE TM

350mm x 200mm S Cam Brakes

420mm x 180mm S Cam Brakes

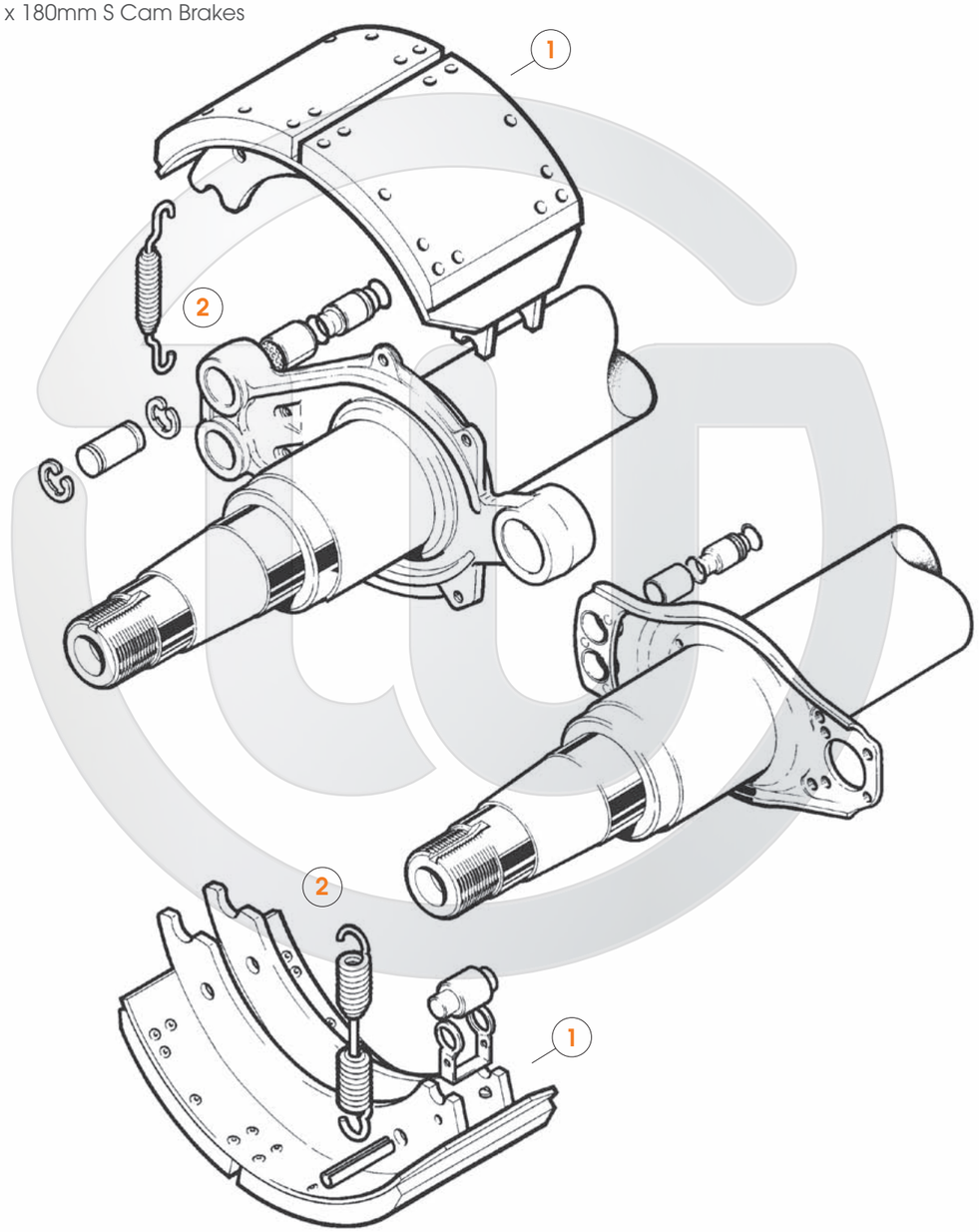

Item	Description	Page
1	Brake Shoe Assembly	44
2	Brake Hardware Kit	34

ROR/RUBERY OWEN BMX TRAILER AXLE TM

350mm x 200mm S Cam Brakes

420mm x 180mm S Cam Brakes

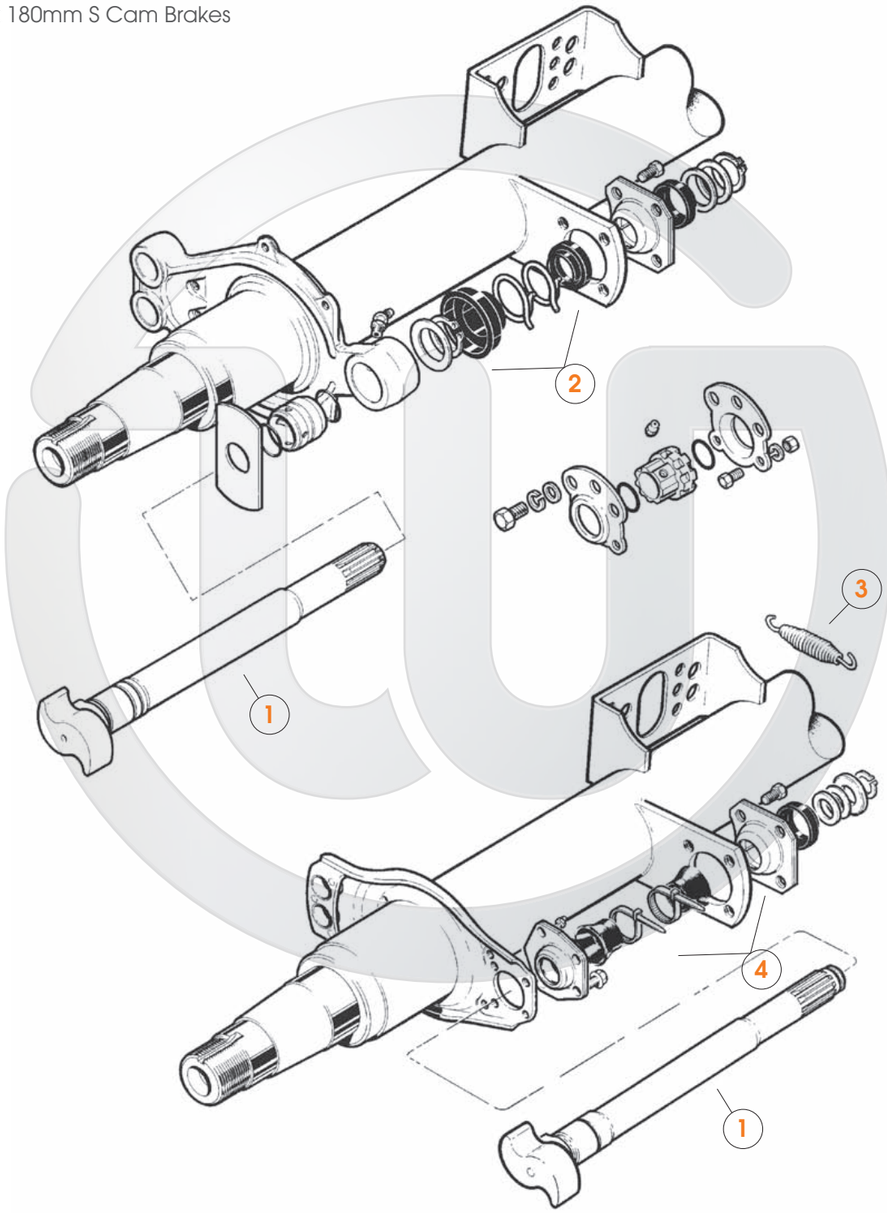

Item	Description	Page
1	Camshaft	86-88
2	Camshaft Kit	117
3	Slack adjuster return spring	36
4	Alternative camshaft kit	86-88

BRAKE ASSEMBLY

ROR/RUBERY OWEN BMX TRAILER AXLE TM

420mm x 180mm S Cam Brakes Parallel Bearing

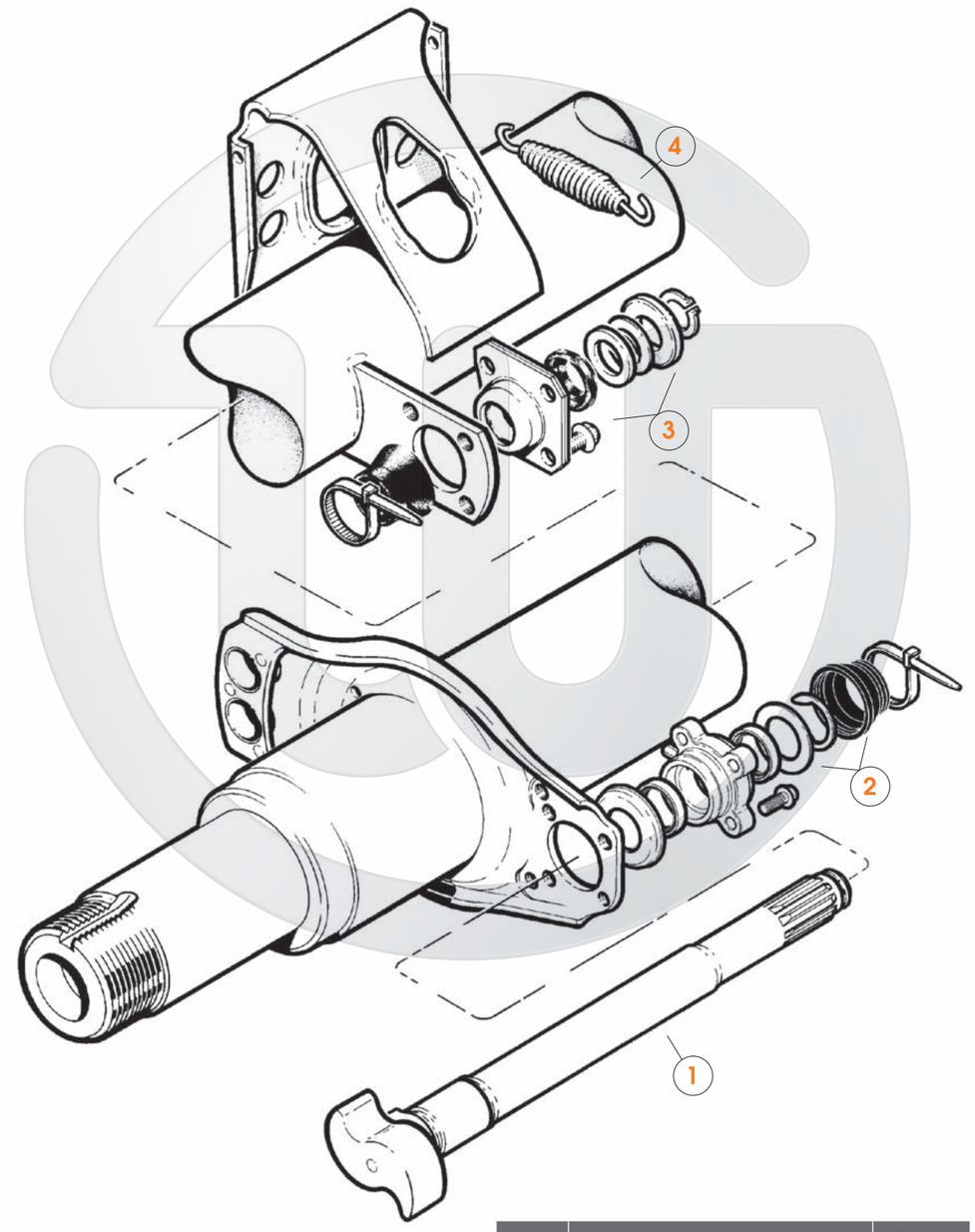

Item	Description	Page
1	Camshaft	86-88
2	Camshaft Kit	117
3	Alternative camshaft kits	86-88
4	Slack adjuster return spring	36

MERITOR/ROR TM Trailer Axle

DX195, ELSA VGT195 Calipers

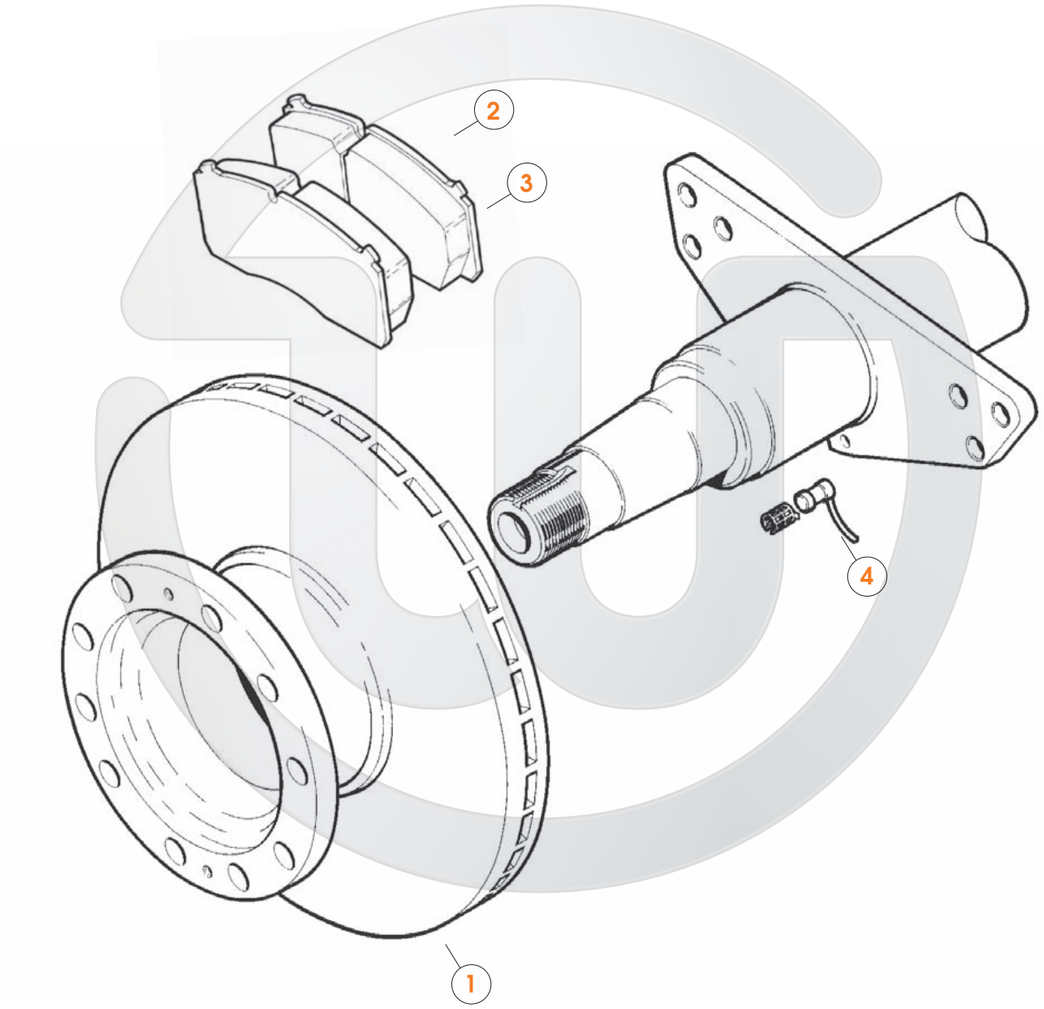

Item	Description	Page
1	Disc Brake Rotor Assembly	66
2	Disc Pads DX195	65
3	Disc Pads ELSA VGT195	65
4	ABS Sensor	58, 60

SAF J Series Trailer Axle

RZ10242 & RZ12242 Axle

420mm x 180mm

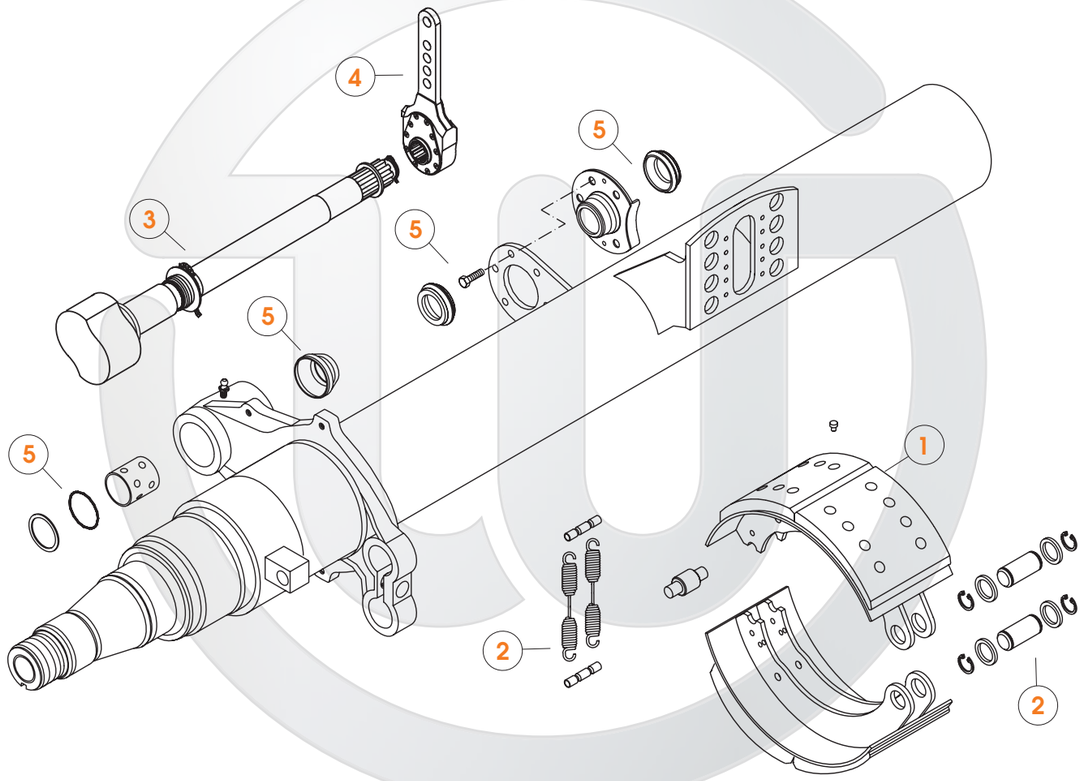

Item	Description	Page
1	Brake Shoe Assembly	44
2	Brake Hardware Kit	35
3	Camshaft Assembly	88
4	Slack Adjuster	122-124
5	Camshaft Repair Kit	119

SAF - Integral/Intradisc

B19, BL9, S19, SL9, Z19 & ZIL9

Wabco PAN 19.1 Calipers inc ABS

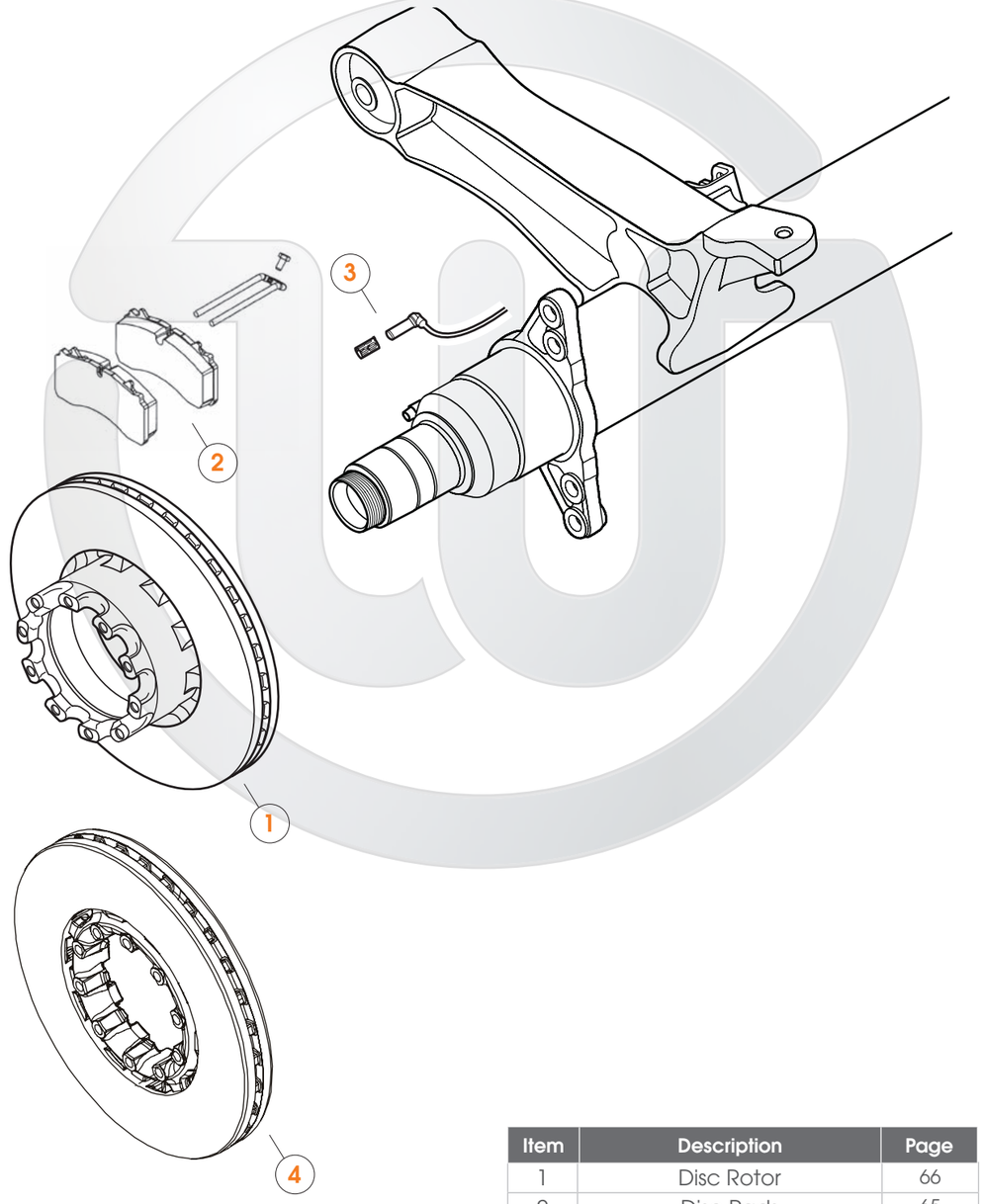

Item	Description	Page
1	Disc Rotor	66
2	Disc Pads	65
3	ABS Sensor	58-60
4	Alternative Disc	66

BRAKE ASSEMBLY

YORK Axle Type 2782 & 2784 Stud Type Hubs Trailer Axle

Rockwell 16 1/2" X 7" S Cam Brakes

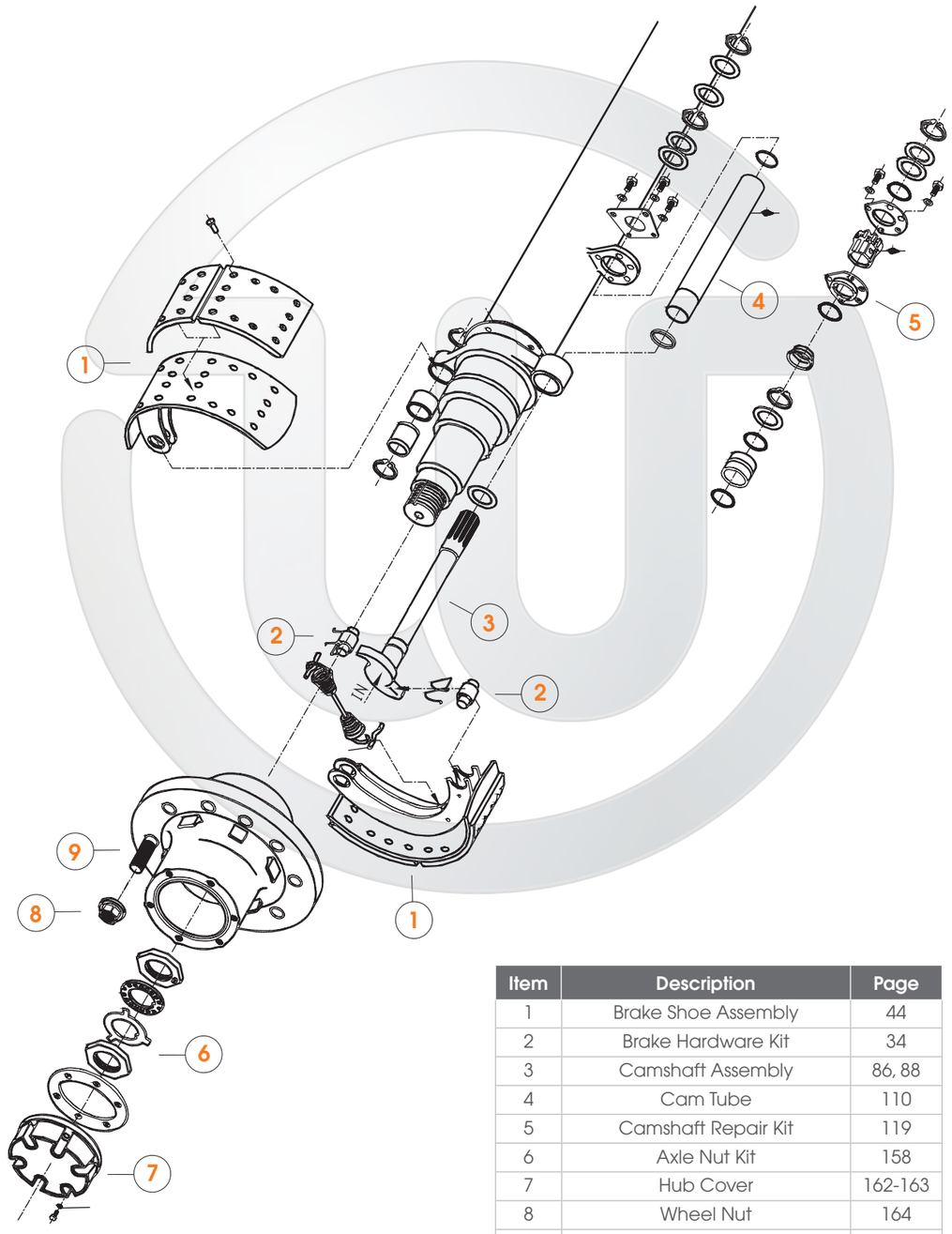

Item	Description	Page
1	Brake Shoe Assembly	44
2	Brake Hardware Kit	34
3	Camshaft Assembly	86, 88
4	Cam Tube	110
5	Camshaft Repair Kit	119
6	Axle Nut Kit	158
7	Hub Cover	162-163
8	Wheel Nut	164
9	Wheel Stud	164

YORK Axle Type 2950 Stud Type Hubs Trailer Axle

335mm X 210mm, Drum with S Cam Brakes

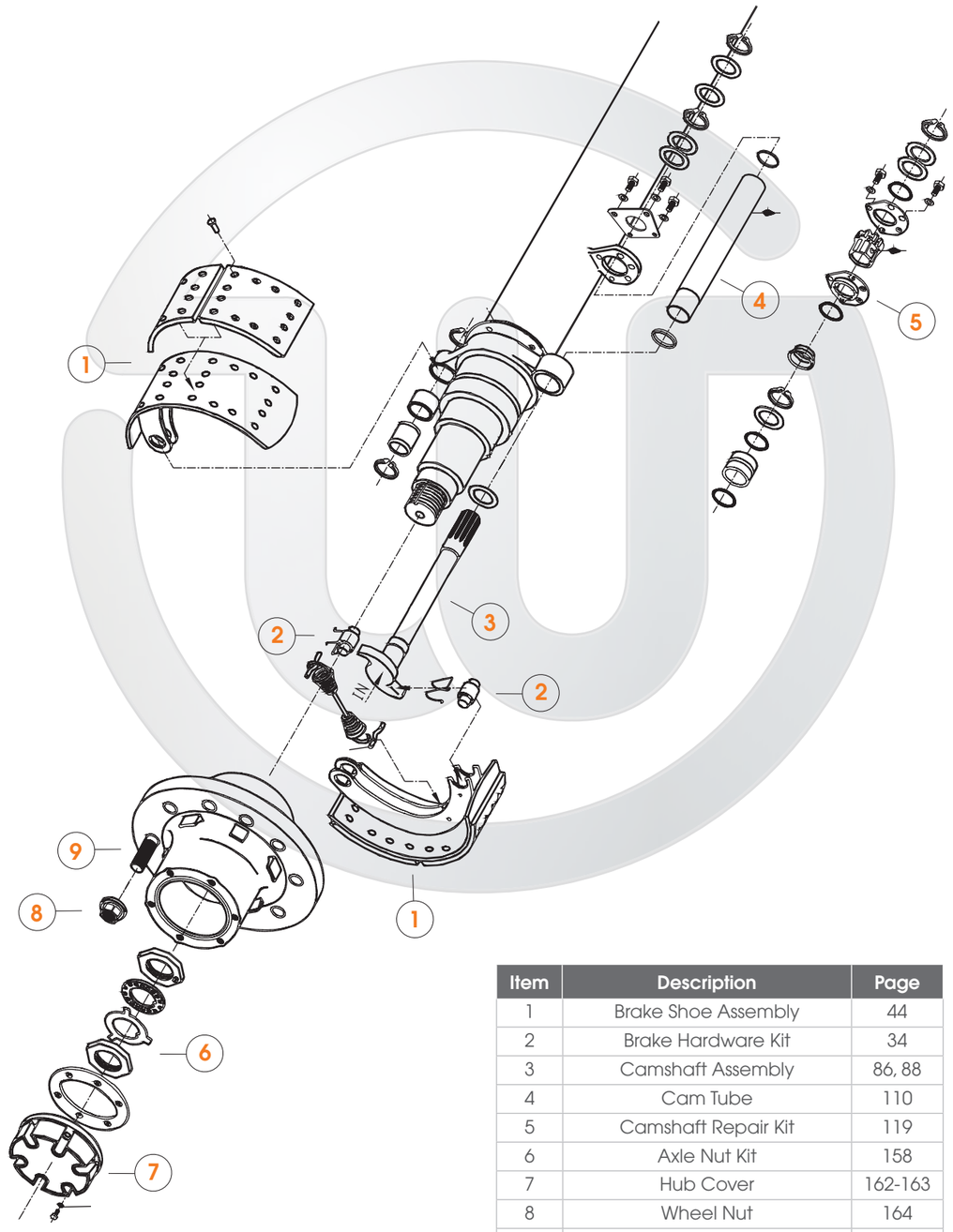

Item	Description	Page
1	Brake Shoe Assembly	44
2	Brake Hardware Kit	34
3	Camshaft Assembly	86, 88
4	Cam Tube	110
5	Camshaft Repair Kit	119
6	Axle Nut Kit	158
7	Hub Cover	162-163
8	Wheel Nut	164
9	Wheel Stud	164

HENDRICKSON Intraax Suspension

SUITS: 23K, 25K, 30K AAEDT & AANT

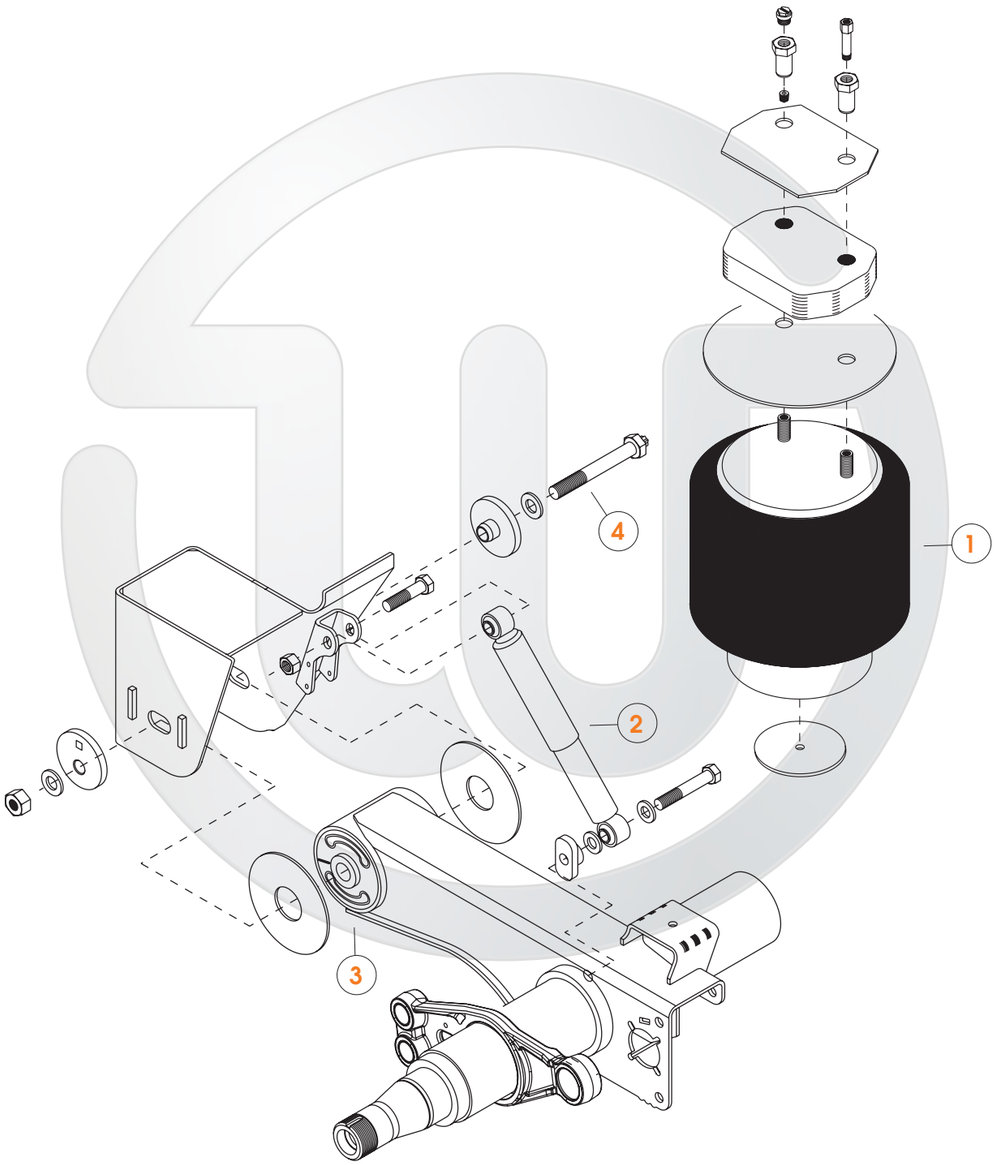

Item	Description	Page
1	Air Spring Assembly	136
2	Shock Absorber	145
3	Intraxx End Beam Bush	155
4	End Beam Bolt & Nut	155

SAF RZ10242 & RZ12242 Axle

INTRADISC SUSPENSION

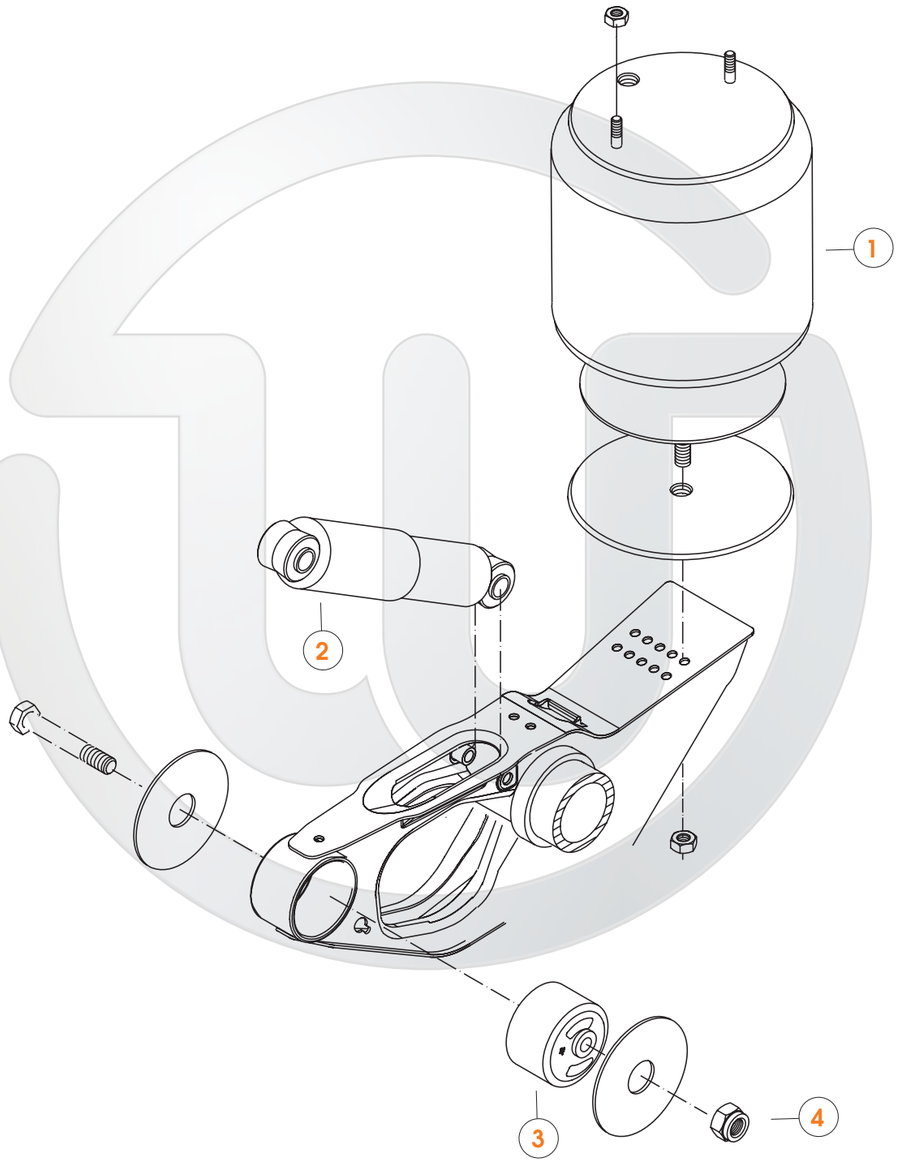

Item	Description	Page
1	Air Spring Assembly	136
2	Shock Absorber	145
3	End Beam Bush	155
4	End Beam Bolt & Nut	155

YORK Tecair FB VRH

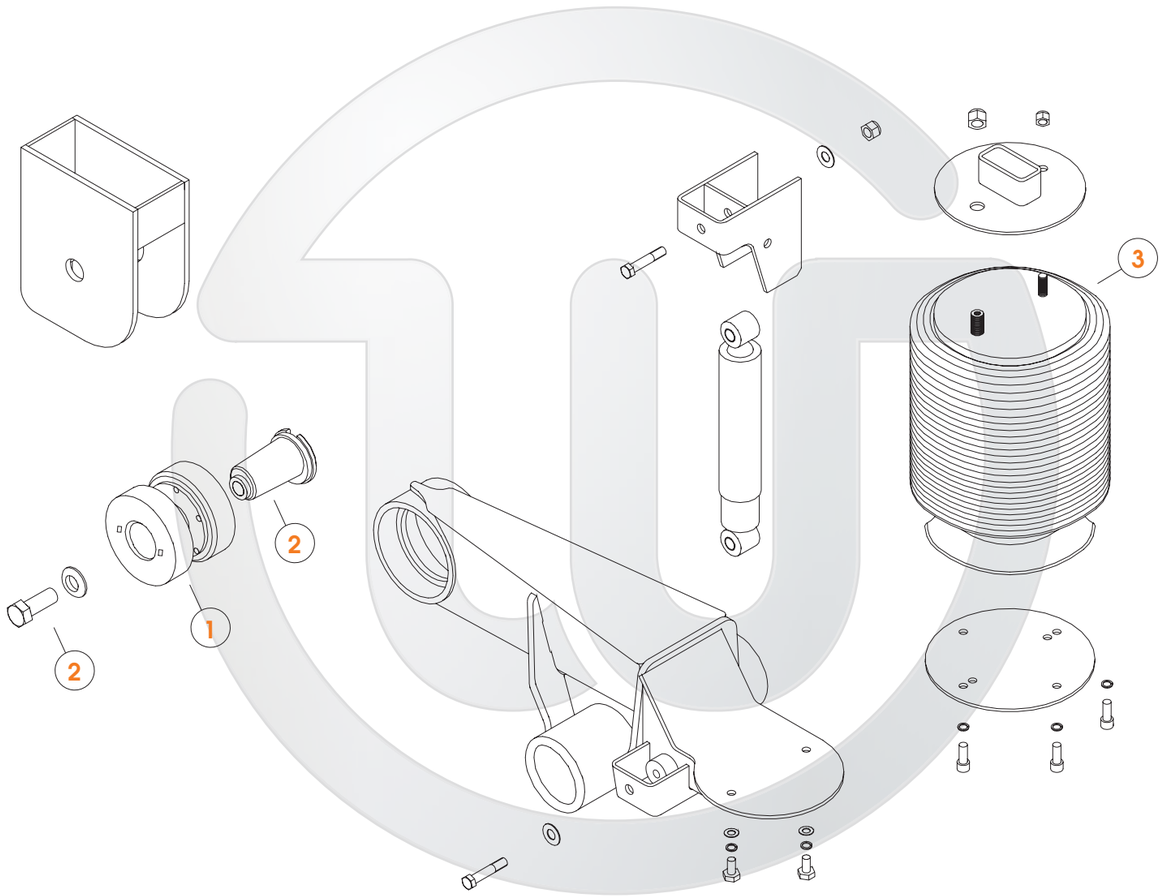

Item	Description	Page
1	Suspension / Pivot Pad Kit	154
2	Pivot Pin Assembly	155
3	Air Spring Assembly	136

YORK Tecair 1& 2

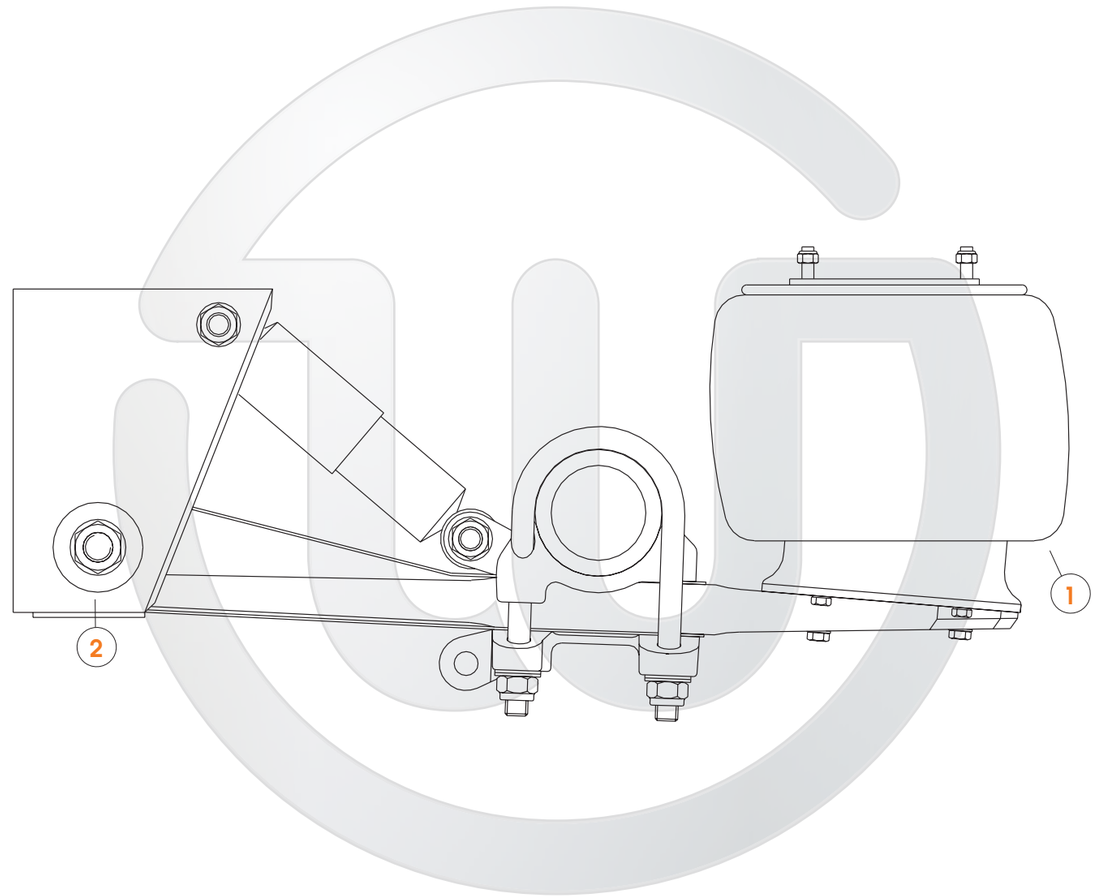

Item	Description	Page
1	Air Spring Assembly	136
2	Pivot Arm Bush	154

SUSPENSION ASSEMBLY

BRAKE HARDWARE

BRAKE HARDWARE KIT APPLICATION LIST	34-35
BRAKE RETURN SPRING	36-37
ANCHOR PINS & BUSHES, CAM ROLLERS & RETAINERS	38-39

watts

BRAKE HARDWARE KITS

Brake hardware kits are the most common brake part replaced when relining the brake system. The Watts brake hardware kits are manufactured to the OE specification as these components are crucial in the braking system efficiency and service life.

Features & Benefits

The anchor pins and brake rollers are hardened for service life under extreme environment conditions like off-road, logging & quarry. The brake return springs are heavy duty rated and also powder coated to prevent rusting and also maintains efficient braking & safety during the maintenance cycle. All mounting bolts are graded 8.8 to prevent shearing and cross thread.

BRAKE HARDWARE KIT APPLICATION LIST

WT3331 GP HARDWARE KIT WITH SHORT BOLT ON ANCHOR PINS AND KNURLED ROLLERS
(BI-METAL)

CONTENTS:	PART NUMBER:
1 HD RETURN SPRING (BLACK)	WT3451
2 SHORT ANCHOR PIN ASSEMBLY	WT3304S
2 BI-METAL BUSHES	WT3207BM
2 KNURLED ROLLERS	WT3403
1 ROLLER RETAINER KIT	WT3417M
2 RETAINER PINS	WT3452M

WT3331Y YORK HARDWARE KIT WITH SHORT BOLT ON ANCHOR PINS AND KNURLED ROLLERS

CONTENTS:	PART NUMBER:
1 HD RETURN SPRING (BLACK)	79506498
2 ANCHOR PIN ASSEMBLY	WT3304
2 S/STEEL BUSHES	WT3207
2 KNURLED ROLLERS	WT3403
1 ROLLER RETAINER KIT	WT3417M
2 RETAINER PINS	WT3452M

WT3332SS GP HARDWARE KIT WITH BOLT ON ANCHOR PINS, KNURLED ROLLERS AND SUPPORT WASHERS
(S/STEEL)

CONTENTS:	PART NUMBER:
1 HD RETURN SPRING (BLACK)	WT3451
2 ANCHOR PIN ASSEMBLY	WT3304
2 STAINLESS STEEL BUSHES	WT3207
2 KNURLED ROLLERS	WT3403
1 ROLLER RETAINER KIT	WT3417M
2 RETAINER PINS	WT3452M
4 SUPPORT WASHERS	WT3302U

WT3332 GP HARDWARE KIT WITH BOLT ON ANCHOR PINS, KNURLED ROLLERS AND SUPPORT WASHERS
(BI-METAL)

CONTENTS:	PART NUMBER:
1 HD RETURN SPRING (BLACK)	WT3451
2 ANCHOR PIN ASSEMBLY	WT3304
2 BI METAL BUSHES	WT3207BM
2 KNURLED ROLLERS	WT3403
1 ROLLER RETAINER KIT	WT3417M
2 RETAINER PINS	WT3452M
4 SUPPORT WASHERS	WT3302U

WT3333SS ROCKWELL Q SERIES HARDWARE KIT WITH STAINLESS STEEL BUSHES
(S/STEEL)

CONTENTS:	PART NUMBER:
1 RETURN SPRING (ORANGE)	WT3454
2 RETURN SPRING (BROWN)	WT3453
2 S/STEEL BUSHES	WT3207
2 KNURLED ROLLERS	WT3403
2 ROCKWELL ANCHOR PIN	WT3305
2 RETAINER PINS	WT3452M
2 CAMROLLER RETAINER	WT3418

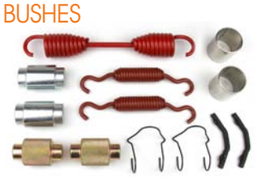

WT3333 ROCKWELL Q SERIES HARDWARE KIT WITH BI-METAL BUSHES
(BI-METAL)

CONTENTS:	PART NUMBER:
1 RETURN SPRING (ORANGE)	WT3454
2 RETURN SPRING (BROWN)	WT3453
2 BI-METAL BUSHES	WT3207BM
2 KNURLED ROLLERS	WT3403
2 ROCKWELL ANCHOR PIN	WT3305
2 RETAINER PINS	WT3452M
2 CAMROLLER RETAINER	WT3418

WT3335SS FRUEHAUF XEM3 HARDWARE KIT WITH STAINLESS STEEL BUSHES
(S/STEEL)

CONTENTS:	PART NUMBER:
1 RETURN SPRING (ORANGE)	WT3454
2 RETURN SPRING (BROWN)	WT3453
2 S/STEEL BUSHES	WT3207
2 KNURLED ROLLERS	WT3403
2 ROCKWELL ANCHOR PIN	
2 RETAINER PINS	WT3452M
2 CAMROLLER RETAINER	WT3418

WT3337 BPW NEW GENERATION 420 x 180 HARDWARE KIT

CONTENTS:	PART NUMBER:
2 RETURN SPRING (BLACK)	WT3459
4 RETURN SPRING (SILVER)	WT3470
2 CAM ROLLER	WT3429
4 CAM ROLLER RETAINER	WT3430
2 RETAINER PIN	WT3457
2 COTTER PIN	WT3431
OEM Part No	098064218BHNG

WT3338 BPW BRAKE 95, 420 x 180 HARDWARE KIT

CONTENTS:	PART NUMBER:
1 RETURN SPRING (SILVER)	WT3478
2 RETURN SPRING (HOOK)	WT3477
2 RETURN SPRING (STRAIGHT)	WT3476
2 CAM ROLLER KIT B95	WT3446
4 C CLIP	WT3346
1 RETURN SPRING (SLACK)	WT3456
OEM Part No	098064218BH95

WT3339 SAF J SERIES AXLE RZ12242/18C & RZ 10224/18C

CONTENTS:	PART NUMBER:
2 RETURN SPRING	WT7138
2 RETAINER PIN	WT7136
2 BOLT ON RETAINER KIT	WT3417
2 BRAKE ROLLER	WT3403S
2 CIRCLIP	WT3205
2 WASHER	WT3203
2 ANCHOR PIN	WT3199

WT3340 EATON ES11 HARDWARE KIT

CONTENTS:	PART NUMBER:
1 RETURN SPRING	WT7085
2 RETAINING SPRING	WT7086
2 BRAKE ROLLER	WT3403
2 BRAKE ROLLER RETAINER	WT3401

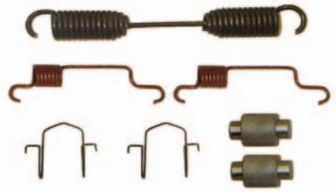

WT3341 BPW BRAKE 95, 360 x 200 HARDWARE KIT

CONTENTS:	PART NUMBER:
2 RETURN SPRING (SILVER)	WT3472
2 RETURN SPRING (HOOK)	WT3477
2 RETURN SPRING (STRAIGHT)	WT3476
2 CAM ROLLER KIT B95	WT3446
4 C CLIP	WT3346
1 RETURN SPRING (SLACK)	WT3456
OEM Part No	098063620BH95

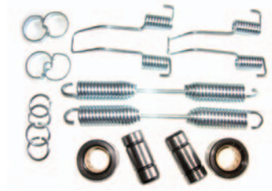

WT3342 ROCKWELL Q SERIES FRONT STEER HARDWARE KIT

CONTENTS:	PART NUMBER:
1 RETURN SPRING (BLACK)	WT7098
2 RETURN SPRING (BROWN)	WT3453
2 S/STEEL BUSHES	WT3207
2 KNURLED ROLLERS	WT3403
2 ROCKWELL ANCHOR PIN	WT3305
2 RETAINER PINS	WT3452M
2 CAMROLLER RETAINER	WT3418

WT3343 RUBERY OWEN BMX AXLE HARDWARE KIT

CONTENTS:
- 2 Bi-Metal Anchor Bush
- 2 Retainer
- 2 Brake Rollers
- 2 Anchor Pins
- 2 Split Pins
- 2 Retainer Springs
- 1 Return Spring

Part No	Description	Application	
WT3451	Return Spring O.D. 26mm TH: 2.5mm L.G. 148mm	BPW 05.397.26.03.0 Transpec 019009837 Slack Adjuster spring	
WT3456	Slack Return Spring O.D. 25.4mm TH: 3.0mm L.G: 152mm	General Purpose Slack Adjuster Return Spring	
WT3456L	Return Spring O.D. 22.5mm TH: 2.5mm L.G. 235mm	BPW 05.397.26.02.0 Slack Adjuster Return Spring	
WT3459	Return Spring O.D. 24mm TH: 4mm L.G. 265mm	BPW 05.397.46.07.0 Transpec 01900864 Brake Shoe spring two per wheel	
WT3466	Return Spring O.D. TH: L.G. 124mm	Freighter 154-00860 Eaton B1886, Cam end 'E34' Brake Shoe spring	
WT3470	Return Springs O.D. 21mm TH: 4mm L.G. 105mm	BPW 03.397.44.06.0 Transpec 019009561 New Gen-Brake Shoe	

Part No	Description	Application	
WT3471	Return Spring O.D. 25.4mm L.G. 168mm	Freighter 154-30108 Standard Forge 208106 Rockwell 2258V256	
WT3473	Retainer Spring O.D. 19mm L.G. 106mm	DANA 12 1/4" STD Forge	
WT3476	Return Spring O.D. 34mm L.G. 286mm TH: 5.4mm	BPW 03.397.33.06.0 Brake 95	
WT3477	Return Spring B95 Hooked	BPW Brake 95 Use WT3338 hardware kit for 4218 axle Use WT3341 hardware kit for 3620 axle	
WT3478	Return Spring B95 Straight	BPW Brake 95 Use WT3338 hardware kit for 4218 axle Use WT3341 hardware kit for 3620 axle	

ANCHOR PINS & BUSHES, CAM ROLLERS & RETAINERS

A OVERALL LENGTH
B SMALL DIAMETER
C LARGE DIAMETER
D CONTACT SURFACE WIDTH

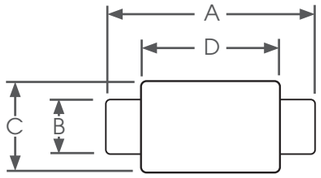

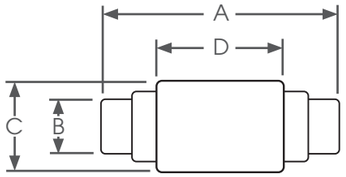

Part No	A	B	C	D	Application
WT3203	**Anchor Pin Spacer Washer** O.D. 32mm O.D. 48mm TH: 1.6mm				Freighter 154-00824 Rockwell 1229-B-1848 Ruby Owen 6719 Eaton B-2019 & 16071 Standard Forge 403145
WT3206	**Anchor Pin Bush** Stainless Steel- O/S slot O.D. 32mm O.D. 35mm L.G. 37mm				Fruehauf AXA-0068 Rockwell 1225-A-443 Ruby Owen 6666
WT3207	**Anchor Pin Bush** Same as above without slot Stainless steel				Fruehauf AXA-0068 Rockwell 1225-B-496 Eaton B-2022
WT3207B	**Anchor Pin Bush** Same as above in Bi-Metal Bronze bush				Repalces WT3207
WT3208	Anchor Pin Bush O.D. 36mm O.D. 40mm L.G. 60mm				BPW 03.112.33.03.0 Transpec 019005093
WT3213	**Anchor Pin Bush** O.D. 32mm O.D. 35mm L.G. 37mm				Rockwell 1225-G-449 Stainless steel centre slot
WT3216	**Anchor Pin** O.D. 25.4mm L.G. 70mm				Freighter 154-30112 Standard Forge 403147
WT3302U	**Support Washer** I.D. 32mm X 16mm O.D. 45mm				Use with WT3304 anchor pin
WT3304	**Anchor Pin Bolt Assembly** Can be used on shoes fitted with support washers O.D. 32mm L.G. 71mm				Suits Rockwell GP shoes also used in WT3332SS hardware kit
WT3304S	**Anchor Pin Bolt Assembly** suits WT5032 shoes without support washers O.D. 32mm L.G. 57mm				Suits Rockwell GP shoes

Part No	A	B	C	D	Application
WT3305	**Anchor Pin** O.D. 32mm L.G. 57mm				Suit Rockwell Q Plus series 1259-N-274
WT3401	**Cam Roller Retainer Clip** USE WT3333SS hardware Kit				Rockwell, Meritor Quick Change & Q Plus series
WT3403	**Cam Roller**				General purpose 16 1/2" Knurled
	57.2mm	19.05	31.8mm	32.5mm	
WT3403S	**Cam Roller**				General purpose 16 1/2" Smooth
	57.2mm	19.05	31.8mm	32.5mm	
WT3404	**Cam Roller**				General purpose 16 1/2", 1/8" OS Knurled
	57.2mm	19.05	34.9mm	32.5mm	
WT3404S	**Cam Roller**				General purpose 16 1/2", 1/8" OS, Smooth
	57.2mm	19.05	34.9mm	32.5mm	
WT3405	**Cam Roller**				General purpose 16 1/2", 1/4" OS Knurled
	57.2mm	19.05	38.0mm	32.5mm	
WT3429	**Cam Roller**				BPW New Generation Shoes
	78mm	26mm	42mm	32.5mm	
WT3433	**Cam Roller**				SAF SK, RS9042 & RS11242
	53mm	20mm	37mm	36mm	
WT3417	**Cam Roller Bolt On Retainer Kit** Kit contains one wheel				Meritor GP Shoe Use WT3332SS hardware kit
WT3432	**Cam Roller** I.D. 19mm O.D. 38mm L.G. 35mm				Freighter 154-30109 Standard Forge 204108-001

BRAKE SHOE PROGRAM

watts

BRAKE SHOE PROGRAM

Our commercial vehicle brake shoe kit program was the first to be introduced some 10 years ago. Today we have the most comprehensive range available in the market covering truck & trailer applications.

We also cover axle manufacturers such as BPW, Colrain, Eaton, Fruehauf, KHitch, Hendrickson, Meritor, SAF, TMC & York.

Textar, DON & Bremsbelage brake friction materials are available across the entire range of brake shoe kits which include the Watts brake hardware kits.

BREMSBELAGE

The Bremsbelage 8250 compact range of new brake shoes to suit truck & trailer applications complies with FMVSS-121 & SAEJ661A international standard specifications and is rated at 23,000lb capacity. All shoe kits include brake hardware and are batch coded for traceability. If your fleet operators are requiring an economical priced brake shoe then look no further than the Bremsbelage 8250 range of new shoe kits.

- **23000 lb rated linings**
- **FMVSS-121 & SAEJ661A international standard**
- **Includes brake hardware kits**
- **Batch coded for traceability**

TEXTAR T090 & T099
Brake Shoe Kits

Textar T090 fitted as genuine to all BPW axles is a premium, high performance brake lining. Both Textar T090 & T099 are ideally suitable for a wide range of brake foundation designs & applications. The Textar friction material portfolio T090 and T099 is now available to suit the Meritor axle range in P Type, Quick Change & Q Plus axles, delivering high brake performance and drum compatibility across all axles on the truck & trailer configurations.

Both materials comply with industry standards ECE90 & SAEJ661 approvals as well as ADR on BPW axles. Textar is the sole supplier to the new patented BPW brake lining fitted to the Brake 95 & New Generation brake foundation. Consider using these quality materials across all axle configurations to achieve optimal performance and reduce your operating costs today.

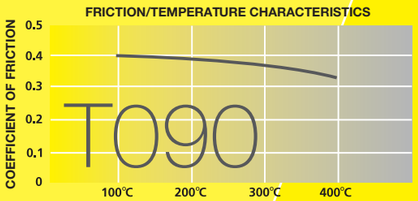

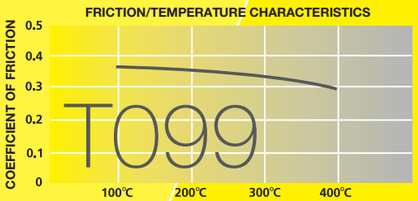

TEXTAR IS A REGISTERED TRADEMARK OF TMD

BRAKE SHOE KITS

7222

Ideally suited to trucks and trailers, Don 7222 is a highly versatile medium friction material, designed for a broad range of applications.

Fomulated to perform at normal operating temperatures, Don 7222 has a well-earned reputation as a cost effective material, offering long service life together with low running costs, mile after mile.

7444

Derived from O.E. friction materials, Don 7444 is a high performance friction material for truck and trailer, quarry/logging, garbage trucks and heavy plant vehicles.

The high quality Don 7444 is designed to perform under the most extreme Australian conditions, at high temperatures, while returning virtually zero brake fade.

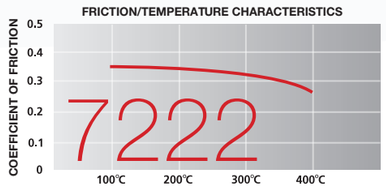

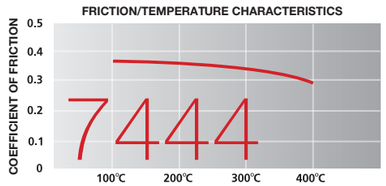

BRAKE SHOE KITS - TRUCK & TRAILER APPLICATIONS

Description	Drum/Width	Brake Lining	DON7222	DON7444	Textar T090	Textar T099	Bremsbelage 8250
BPW Transpec							
420X180 Brake 95	420X180	19032	5047-1130RK	5047-1131RK	5047-1132RK	5047-1133RK	5047-1134RK
420X180 New Generation	420X180	19032	5047-1060RK	5047-1061RK	5047-1062RK	5047-1063RK	5047-1064RK
420X200 Brake 95	420X200	19094			5080-1282RK	5080-1283RK	
420X200 New Generation	420X200	19094			5081-1272RK	5081-1273RK	
360X200 KH, KR Series, Brake 95	360X200	1990217	5069-1270RK	5069-1271RK	5069-1272RK	5069-1273RK	
DANA- Spicer Axle							
Spicer 19.5 Wheel	381X219	4710	5066-1400R				
EATON Axle							
EATON ES11 (extended service)	419X178	4709		5067-1301RK			
EATON ES11 Front Steer	419X152	4725					5062-4725RK
FREIGHTER MAXI-CUBE							
Trailer GP, P Type	419X178	19037	5032-1010RK	5032-1011RK	5032-1012RK	5032-1013RK	5032-1014RK
Quick Change	419X178	19037	5042-1050RK	5042-1051RK	5042-1052RK	5042-1053RK	5042-1054RK
Q Plus	419X178	19106	5058-1090RK	5058-1091RK	5058-1092RK	5058-1093RK	5058-1094RK
HAULMARK Trailer	419X178	19037	5032-1010RK	5032-1011RK	5032-1012RK	5032-1013RK	5032-1014RK
Axle with BPW 420X180	420X180	19032	5047-1130RK	5047-1131RK	5047-1132RK	5047-1133RK	5047-1134RK
HENDRICKSON Axle							
GP, P Type	419X178	19037	5032-1010RK	5032-1011RK	5032-1012RK	5032-1013RK	5032-1014RK
Quick Change	419X178	19037	5042-1050RK	5042-1051RK	5042-1052RK	5042-1053RK	5042-1054RK
Q Plus	419X178	19106	5058-1090RK	5058-1091RK	5058-1092RK	5058-1093RK	5058-1094RK
Q Plus	419X219	4711					5061-4711RK
K HITCH Axles							
GP, P Type	419X178	19037	5032-1010RK	5032-1011RK	5032-1012RK	5032-1013RK	5032-1014RK
Fruehauf XEM3	419X178	19037	5041-1110RK	5041-1111RK	5041-1112RK	5041-1113RK	5041-1114RK
Fruehauf Propar	419X178	19037	5030-1020RK	5030-1021RK	5030-1022RK	5030-1023RK	5030-1024RK
KREUGER							
P Type GP Shoe	419X178	19037	5032-1010RK	5032-1011RK	5032-1012RK	5032-1013RK	5032-1014RK
Quick Change	419X178	19037	5042-1050RK	5042-1051RK	5042-1052RK	5042-1053RK	5042-1054RK
Q Plus	419X178	19106	5058-1090RK	5058-1091RK	5058-1092RK	5058-1093RK	5058-1094RK
MERITOR-ROR Axles							
General Purpose P Type	419X178	19037	5032-1010RK	5032-1011RK	5032-1012RK	5032-1013RK	5032-1014RK
Quick Change	419X178	19037	5042-1050RK	5042-1051RK	5042-1052RK	5042-1053RK	5042-1054RK
Q Plus	419X178	19106	5058-1090RK	5058-1091RK	5058-1092RK	5058-1093RK	5058-1094RK
Q Plus, IMT axle	381X178	4705	5075-4705R				
Q Plus	419X219	4711					5061-4711RK
Q Plus - Front Steer	419X127	4720		5068-1261RK			5068-1264RK
RUBERY OWEN, ROR Axle							
BMX axle	350X200	RW21/22/1	5076-2122RK				
SAF Axle							
P Type, fitted with anchor pins	420X180	19032	5057-1350RK	5057-1351RK	5057-1352RK	5057-1353RK	
TMC Trailer							
GP, P Type	419X178	19037	5032-1010RK	5032-1011RK	5032-1012RK	5032-1013RK	5032-1014RK
Fruehauf XEM3	419X178	19037	5041-1110RK	5041-1111RK	5041-1112RK	5041-1113RK	5041-1114RK
Fruehauf Propar	419X178	19037	5030-1020RK	5030-1021RK	5030-1022RK	5030-1023RK	5030-1024RK
WESTCO Trailer	419X178	19037	5032-1010RK	5032-1011RK	5032-1012RK	5032-1013RK	5032-1014RK
YORK Axle							
Type 2950 Axle	335X210	YKB1/2/2	5071-2000RK				5071-2004RK
Type 2782 & 2784 Axle	419X178	19037	5032-1010RK	5032-1011RK	5032-1012RK	5032-1013RK	5032-1014RK

Note: All shoe kits include Watts Heavy Duty Brake Hardware Kits

BRAKE SHOES UNLINED

UNLINED BRAKE SHOE CROSS REFERENCE LIST	48
BRAKE LINING X REFERENCE TO UNLINED SHOE	49
UNLINED BRAKE SHOES	50-55

watts

FEATURES & BENEFITS

Achieving maximum service life and safety from your friction material begins with its foundation... the brake shoe. The Watts new brake shoes are manufactured and tested to the highest standards & certification TS16949 used by OEM, guaranteeing extended life of the brake friction material.

E-Coating (electro-powder coating)

The E-Coating is applied to every Watts brake shoe to prevent rust and are environmentally tested to withstand 1,000 hours of salt spray testing. That's DOUBLE the standard of other competitor's product.

Higher Grade Steel

All shoe platforms and webs are made from thicker high grade carbon steel, which adheres to controlled specifications and quality processes to ensure weld strength and performance.

Seam-Welding

Unlike competitors who only spot-weld the Watts shoe is welded along the shoe's entire platform/web seam, for added strength and durability.

Heat Treating

All our shoes are heat treated on both roller and anchor journals to harden the steel and prevent wear like distortion and mushrooming, which can result in brake judder, brake squeal and cause reduced braking performance. This process is stamped with an * on the journals.

Precise Dimension Monitoring

Critical dimensions such as shoe radius are monitored and controlled with computerized gauges to ensure the brake shoes will provide uniform, balanced braking performance. Watts has also taken measures to identify our product from our competitors. All brake shoes are production coded and uniquely stamped with the Watts Logo.

UNLINED BRAKE SHOE CROSS REFERENCE LIST

Shoe #	OEM x Reference	Brake Lining #	Lining WVA #	Drum Size/Width	Application
WT5030	ACE-006184-001	4515	19037	16.5" x 7"	Fruehauf- P Type
WT5030WR	A3722N66WR	4515	19037	16.5" x 7"	Fruehauf P Type - Support Washers
WT5032	A3722N66	4515	19037	16.5" x 7"	General Purpose - P Type
WT5032WR	A3722N66	4515	19037	16.5" x 7"	General Purpose - Support Washers
WT5041	ACF003379-001	4515	19037	16.5" x 7"	Fruehauf- QC XEM3
WT5042	A32222S1293	4515	19037	16.5"x7"	Meritor - QC
WT5047-95	0509146360	BC/36/1	19032	420 x 180	BPW Brake 95
WT5047-NG	0509126642	BC/36/1	19032	420 x 180	BPW New Generation
WT5049	A3722D82	4524B	n/a	16.5" x 6"	Steer, Meritor P Type
WT5049Q	A3222E1383, 3222Q1291	4524B	n/a	16.5" x 6"	Steer, Meritor QC
WT5057	2056012000, 3054005200	BC/36/1	19032	420 x 180	SAF, J Series Brake P Type
WT5058	A3222D2006	4707	19106	16.5" x 7"	Meritor Q Plus
WT5061	BP7065	4711	n/a	16.5" x 8 5/8"	Hendrickson
WT5062	E10271, 819706	4725	n/a	16.5 x 6"	Steer, Eaton Extended Service (ES)
WT5066	201508	4710	n/a	15" x 8 5/8"	IMT (Ingersoll)
WT5067	819707, 806229	4709	n/a	16.5" x 7"	Eaton Extended Service (ES11)
WT5068	A32222Z2288	4720	n/a	16.5" x 5"	Steer, Meritor Q Plus
WT5069	0509119340	BC/100/ 101/1	19902	360 x 200	BPW Brake 95
WT5071	79788845	YKB/1/2/2	n/a	335 x 210	York - Tapered Lining
WT5075		4705	n/a	381 x 178	IMT Axle
WT5076	15209713B	RW21/22/1	19908	350 x 200	ROR BMX Brake 19.5
WT5080	0509147090	BC/37/1	19094	420 x 200	BPW Brake 95
WT5081	-	BC/37/1	19094	420 x 200	BPW New Generation
WT5086	3095194	VL/86/1	19941	410 x 150	VOLVO ZCAM 6"
WT5087	3095195	VL/87/1	19090	410 x 175	VOLVO ZCAM 7"
WT5088	3095196	VL/88/1	19071	410 x 200	VOLVO ZCAM 8"

BRAKE LINING X REFERENCE TO UNLINED SHOE

Lining Part No	Drum Dia	Application	WATTS Shoe Part No
4514G	419 x 152	Steer - Meritor	WT5045
4515	419 x 178	General Purpose - P Type	WT5032
4515	419 x 178	General Purpose - P Type with support rings	WT5032WR
4515	419 x 178	Meritor Quick Change	WT5042
4515	419 x 178	Fruehauf - P Type	WT5030
4515	419 x 178	Fruehauf - P Type with support rings	WT5030WR
4515	419 x 178	Fruehauf- XEM3	WT5041
4524B	419 x 127	Steer - Meritor P Type	WT5049
4524B	419 x 127	Steer - Meritor Quick Change	WT5049Q
4551B	419 x 219	Meritor - P Type	WT5050
4705	381 x 178	IMT (Ingersoll)	WT5075
4707	419 x 178	Meritor Q Plus	WT5058
4709	419 x 178	Eaton Extended Service (ES11)	WT5067
4710	381 x 219	IMT (Ingersoll) 19.5 wheels	WT5066
4711	419 x 219	Hendrickson	WT5061
4720	419 x 127	Steer Meritor Q Plus	WT5068
4725	419 x 152	Eaton Extended Service (ES)	WT5062
BC/ 100/101/1	360 x 200	BPW Brake 95, 3620/T090	WT5069
BC/36/1	420 x 180	BPW New Generation 26mm Roller	WT5047-NG
BC/36/1	420 x 180	BPW New Generation 32mm Roller	WT5047-NG
BC/36/1	420 x 180	BPW Brake 95, 4218/T090	WT5047-95
BC/36/1	420 x 180	SAF, J Series P Type	WT5057
BC/37/1	420 x 200	BPW Brake 95, 4220/T090	WT5080
BC/37/1	420 x 200	BPW Brake New Generation, 4220/T090	WT5081
YKB1/2/2	335 x 210	York - Tapered Lining, P Type	WT5071
RW/21/22/1	350 x 200	Rubury Owen, BMX Axle	WT5076
VL/86/1	410 x 150	VOLVO ZCAM 6"	WT5086
VL/87/1	410 x 175	VOLVO ZCAM 7"	WT5087
VL/88/1	410 x 200	VOLVO ZCAM 8"	WT5088

Part No	Description	POS	Image
WT5030	Fruehauf Propar "P" Type, 16 1/2" X 7"	Drv/Trailer 	
WT5032	Rockwell GP Shoe 16 1/2" X 7"	Drv/Trailer 	
WT5032WR	Rockwell GP Shoe 16 1/2" X 7" Washer	Drv/Trailer 	
WT5041	Fruehauf XEM3	Trailer 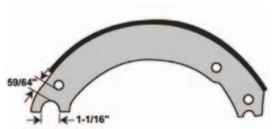	
WT5042	Meritor QC Type Shoe 16 1/2" X 7"	Drv/Trailer 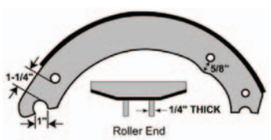	

Please refer to the Bremsbelage, DON or Textar brake shoe kit catalogue for the comprehensive application listing

Part No	Description	POS	Image
WT5045	Rockwell QC Type Shoe 16 1/2" X 6"	Fr Steer 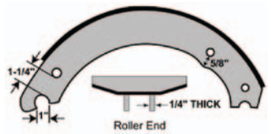	
WT5047	BPW New Generation 420X180	Trailer 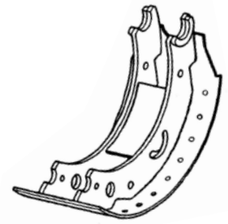	
WT5047-95	BPW Brake 95 420X180	Trailer 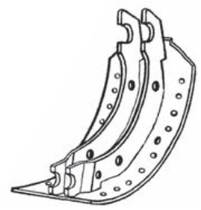	
WT5049	Meritor "P" Type 16 1/2" X6"	Fr Steer 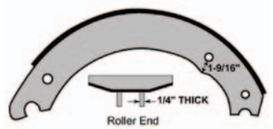	
WT5049Q	Meritor "QC" Type 16 1/2" X6"	Fr Steer 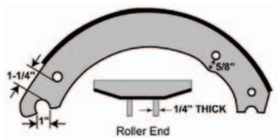	

Part No	Description	POS	Image
WT5057	SAF J Series 420X180	Trailer 	
WT5058	Meritor "Q" Plus 16 1/2" X 7"	Drv/Trailer 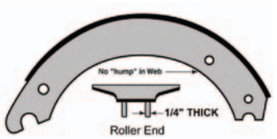	
WT5061	Hendrickson "Q" Plus 16 1/2" X 8 5/8"	Trailer 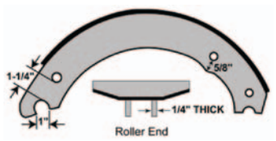	
WT5062	Eaton ES11 Front Steer 16 1/2" X 6"	Steer 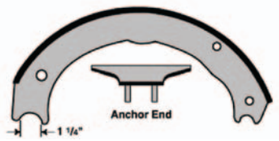	
WT5066	DANA Spicer 19.5 381X219	Trailer 	

Please refer to the Bremsbelage, DON or Textar brake shoe kit catalogue for the comprehensive application listing

Part No	Description	POS	Image
WT5067	Eaton ES11 16 1/2"X 7"	Drive 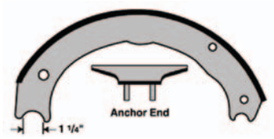	
WT5068	Meritor "Q" Plus Front steer	Fr Steer 	
WT5069	BPW Brake 95 360X200	Trailer 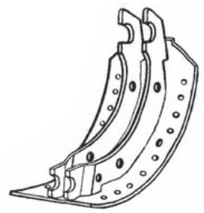	
WT5075	Rockwell IMT axle "Q" PLUS 381X178	Trailer 	
WT5076	Ruby Owen BMX 350X200	Trailer 	

Part No	Description	POS	
WT5080	BPW Brake 95 420X200	Trailer 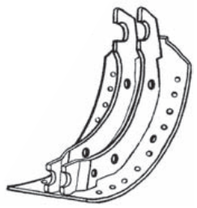	
WT5081	BPW New Generation 420X200	Trailer 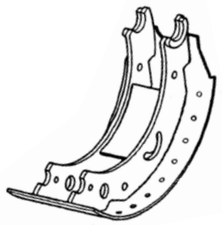	
WT5086	Volvo Z Cam Brake 6" 150 mm	Steer/Drive	LEFT RIGHT
WT5087	Volvo Z Cam Brake 7" 175 mm	Steer/Drive	LEFT RIGHT
WT5088	Volvo Z Cam Brake 8" 200 mm	Steer/Drive	LEFT RIGHT

Please refer to the Bremsbelage, DON or Textar brake shoe kit catalogue for the comprehensive application listing

Part No	Description	POS	
WT5310	MAN / Mecerdes Benz 410X140 3934202819	Fr Steer/ Drive	
WT5320	MAN / Mecerdes Benz 410X160 594200019 6594200719 3934200719	Fr Steer/ Drive	
WT5330	MAN / Mecerdes Benz 410X180 6204200019 6594200319 6594200619 3504200319 6204200219	Fr Steer/ Drive	
WT5340	MAN / Mecerdes Benz 410X220 659.420.0319	Fr Steer/ Drive	

ABS SENSORS

ABS SENSORS - TRUCKS & TRAILERS 58-61

watts

The Watts GS Series range of ABS Brake Sensors which are designed for use in Truck, Trailer and Commercial Vehicle Anti-Lock Braking and Traction Control Systems.

The GS Series sensors are the original Midland, Haldex and Meritor sensor and manufactured to OEM quality standards.

The Sensor is of a two-wire design with the magnetic circuit fully encapsulated into a stainless steel protective shell. The usual mounting configuration to the hub utilises a fixed position holder with a tubular retaining spring.

S1

P1

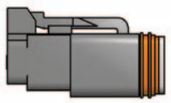
S3

Application Listing - by sensor length

Onyx Part No	Mfr Part No	Ω	Application	Vehicle - OEM Part No	Length	POS	Armour	Type	Connector *
GS010017008	4410328190	1750	MERCEDES	25420518	0.080M	Angled	N	S1	Socket
GS010011023	4410328780	1150	DAF	1361393	0.23M	Angled	N	S1	Socket
GS010017025	4410321710	1750	DAF	1315691	0.25M	Angled	N	S1	Socket
G5010017025K1T	4410328110				0.25M				
GS010017040	4410329050	1750	FRUEHAUF	CF104083	0.4M	Straight	N	S1	Socket
GS010017040KIT	4410329632		BPW	233170700					
			DAF	1506004					
G502417040	0486000134000	1750	FRUEHAUF	CF102959	0.4M	Angled	N	S1	Socket
GS02417040K1T	4410328080		IVECO	5801115879, 9441032808					
	4410329212		SETRA	778807500					
	950364503		RENAULT	5010604322, 5021170122					
	ES5020		SCHMITZ	50019					
			SCAN IA	1784588					
			BPW	233170500					
GS02417050	950364506	1750			0.5M	Straight	N	S1	Socket
GS010017050	950364503	1750			0.5M	Angled	N	S1	Socket
GS010015050KIT	21213034								
GS010017085P	4410321070	1750	RENAULT	5010457732	0.85M	Angled	N	P1	Plug
GS010017085PKIT									
GS010017100A	4410328790	1750	DAF	1506003	1.0M	Angled	Y	S1	Socket
GS010017 126AKIT									
G5010017140	4410328740	1750	RENAULT	5010457045	1.0M	Angled	N	S1	Socket
GS010017140KIT									
GS02417100	4410325730	1750	DAF	1505211	1.0M	Straight	N	S1	Socket
GS02417100KIT									
GS010017100	4410328090	1750	DAF	1504929	1.0M	Angled	N	S1	Socket
GS010017100KIT			IVECO	4460000009					
			KASSBOHRER	77880750340					
			RENAULT	5010422332, 5021170123					
			SAF	4029104200					
GS010017126A	4410328210	1750	MERCEDES	15427818	1.2M	Angled	Y	S1	Socket
GS010017140A	4410328200	1750	MERCEDES	0015426818, 0025426818	1.4M	Angled	Y	S1	Socket
GS01001714OAKIT									
GS010017150	4410328510	1750	MERCEDES	25422518	1.5M	Angled	Y	S1	Socket
GS02417170	4410329000	1750	DAF	1400071	1.7M	Straight	N	S1	Socket
GS02417170K1T	4410329682		IVECO	504013848	1.7M				
	964009003		VOLVO	203907737					
			RENAULT						
			SAF						
GS010017170	4410321080	1750	VOLVO	20566832	1.7M	Angled	N	S1	Socket
GS010017170KIT	4410328130								
	4410329762								

S1

P1

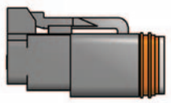
S3

Application Listing - by sensor length

Onyx Part No	Mfr Part No	Ω	Application	Vehicle - OEM Part No	Length	POS	Armour	Type	Connector *
GS010017190*	4410320720	1750	SCAN IA	1530691	1.9M	Angled	N	NO	1 male, 1 female pin
GS010017190*KIT	4410329882			1114847					No connector terminals
	4410329732								crimped to conductor
GS010017205P	4410328580	1750	IVECO	41200561	2.05M	Angled	N	P1	Plug
GSO 100 15 205 P KIT									
GS010017208BE	4410320690	1750	DAF	1505212	2.08M	Angled	N	NO	2 wire bare end
GS010017208BEKIT			ERF	1510205					25mm
GS010017200	4410328140	1750	DAF	1505215	2.OM	Angled	N	S1	Socket
GS010017200KIT			IVECO	5006010272					
			MAN	81271206117					
			RENAULT	5010422334					
GS010017200A	4410328230	1750	DAF	1518008	2.0M	Angled	Y	S1	Socket
GS010017200AKIT			MERCEDES	15428718					
				15420518					
				5429618					
				15423418					
GS010017200*	4410327280	1750	DAF	1517455	2.OM	Angled	N	S1*	Socket coded orange OE
GS010017200*KIT			MERCEDES	5429618					
GS010011250	4410328620	1150	IVECO	41200584	2.5M	Angled	N	S1	Socket
GS010011250KIT									
GS010017250*	4410329200	1750	DAF	1518009	2.5M	Angled	N	S1*	Socket coded orange OE
GS010017250*KIT			MERCEDES	A0025423818/005					
GS010011250	4410328630	1150	IVECO	41200611	2.5M	Angled	N	S1	Socket
GS010011250KIT									
GS02417300	4410329210	1750	MERCEDES	15428818	3.OM	Straight	N	S1	Socket
GS02417300*	4410327270	1750	MAN	36271206004	3.OM	Straight	N	S1*	Socket coded orange OE
GS02417300*KIT			MERCEDES	5429718					
GS02417300	4410324870	1750	MAN	36271206005	3.OM	Straight	N	S1	BLACK SOCKET
GS02417300K1T			MERCEDES	0005423318, 0015423318					
GS010017300	4410328600	1750	MERCEDES	6255420018	3.OM	Angled	Y	S1	Socket
GS010017300KIT									
GS02417300	4410329420	1750	MERCEDES	15428918	3DM	Straight	N	S1	Socket
GS02417300K1T									
GS02417340	4410329410	1750	MERCEDES	35423518	3.4M	Straight	N	S1	Socket
GS010017355BE	4410320920	1750	BPW	233170100	3.55M	Angled	N	NO	2 wire bare ends
GS010017355BEKIT	4410329202		DAF	1518010					50mm
	4410320700		IVECO	42061638					
			MERCEDES	6205420217, 6205420517					
			RENAULT	5000790125					
			VOLVO	1195759					
GS02417360	4410329460	1750	MERCEDES	35424618	3.6M	Straight	N	S1	Socket
GS02417400	4410329470	1750	MERCEDES	35424518	4.0M	Straight	N	S1	Socket

BREMSBELAGE

TRAILER DISC PAD APPLICATION	65
TRAILER DISC ROTOR & DISC PAD AXLE KITS	66-67
DISC ROTOR SPECIFICATIONS	68-69
DISC PAD PROFILES	70-82
DISC PAD - WEAR SENSORS	83

BREMSBELAGE

BREMSBELAGE DISC KITS

Bremsbelage Commercial Vehicle disc rotors are manufactured to BS EN 1561 & ISO185 specifications. This requirement meets the industry standards in Europe and also complies with SAEJ431 standard in America.

The disc rotor tensile strength and grade of the casting for applications on commercial vehicle meets the above standards and all disc rotors have production edge code markings for quality control, safety and traceability requirements. The disc rotors are compatible with the range of Bremsbelage 8550 disc pads which comply with ECE90 European regulations & ISO9001 quality assured.

Bremsbelage disc rotor & disc pad axle kits to suit BPW, Hendrickson, KHitch, Meritor, TMC, SAF & York trailer axles make sense when ordering the right parts for the job consisting of two disc rotors and one set of disc pads.

Not many mechanics are aware but industry regulations stipulate that you are obligated to only fit disc rotors in pairs on trucks, buses & trailer applications for safety reasons.

The Bremsbelage disc rotor & disc pad axle kits ensure the job will have the correct parts resulting in a perfect job well done!

Why not next time make the job easier and order the Bremsbelage disc brake axle kits?

BREMSBELAGE

BRAKE DISC ROTORS

BRAKE PAD SETS

Application	Year	Disc Pad
BPW-Axles		
BPW SB4309 Knorr Bremse caliper, SH series	03-	WDP094K
BPW Eco Maxx type, SB6000, with ECO PLUS, 19.5"	98-	WDP036K
BPW SH Series, SB4345, SB7000-with ECO PLUS + ABS 19.5"	98-	WDP020K
BPW SKH New type, SB3745, Rigid exc ECO PLUS, with exciter ring	99-	WDP092K
BPW SKH SB4309 caliper, 430mm dia 285PCD, 10 stud	00-	WDP094K
BPW SKH SB 3745, Rigid, exc ECO PLUS, with exciter ring	99-	WDP092K
BPW SKH TSB3709, ECO PLUS, 377mm DIA, 285PCD, 8 STUD	10-	WDP106K
BPW SKH TSB4309, ECO PLUS, 430 DIA, 285 PCD, 10 STUD	10-	WDP107K
Hendrickson - Axles		
Hendrickson Intraax axle, includes high tensile bolt kit	00-	WDP020K
Hendrickson Intraax Conmet alloy hubs	02-	WDP020K
Hendrickson Intraax Conmet alloy hubs with 8mm step mounting face	03-	WDP020K
Hendrickson Intraax fitted with Wabco PAN22.1 Calipers	13-	WDP096K
KHitch- Axles		
KHitch, axles fiited with Wabco Pan 19.1 calipers, non ABS	98-	WDP090K
KHitch, Wabco PAN 19.1 caliper with 100 tooth ABS, incl cap screws	00-	WDP090K
IMT - Axle		
IMT axle fitted with Haldex DB19 calipers	09-	WDP102
Meritor/ROR - Axles		
Meritor axle fitted with DX195 calipers	05-	WDP024
Meritor axle fitted with DX225 calipers	05-	WDP081
Meritor axle fitted with EX225 calipers	05-	WDP103
Meritor axle fitted with ELSA VGT195 calipers	05-	WDP095
TMC-Axles		
TMC axle fitted with conmet alloy hubs	98-	WDP096K
TMC axles fiited with Wabco Pan 19.1 calipers non ABS	00-	WDP090K
TMC Wabco PAN 19.1 caliper with 100 tooth ABS, incl cap screws	00-	WDP090K
TMC Wabco PAN 22.1 Caliper, 430 DIA, 285PCD, 10 STUD	00-	WVP096K
SAF-Axles		
SAF Integral 19.5",SAF SK RB 9019 INTRADISC - Wabco PAN 19.1 caliper	00-	WDP090K
SAF Integral 22.5", SK RB 9002 INTRADISC - Wabco PAN 22.1 caliper	00-	WDP096K
SAF Pan 19.1, built in ABS ring 80 teeth	98-	WDP090K
SAF SB7000, SK RS 11222, 22.5" wheels, SK RZ9019,11019	98-	WDP020K
SAF SK RB 9022-9019 Wabco PAN19 caliper, 19.5"wheels	00-	WDP090K
SAF, SK 9042, PAN19.1 Wabco caliper 19.5 wheel 377mm, 196PCD	00-	WDP090K
York-Axles		
York, Wabco Pan 19.1 calipers, non ABS	00-	WDP090K
York Wabco PAN 19.1 caliper with 100 tooth ABS, incl cap screws	00-	WDP090K

TRAILER DISC ROTOR & DISC PAD AXLE KITS

BREMSBELAGE

Application	Year	Axle Kit Part #	Disc Rotor OEM X Reference	Disc Rotor Contents X 2	Disc Pad OEM X Reference	Disc Pad Contents X 1
BPW-Axles						
BPW SB4309 Knorr Bremse caliper, SH series	03-	**BPWKIT5**	0308835050	WDR616	0980106440, 0980107260	WDP094K
BPW Eco Maxx type, SB6000, with ECO PLUS, 19.5"	98-	**BPWKIT1**	0308834060	WDR561		WDP036K
BPW SH Series, SB4345, SB7000-with ECO PLUS + ABS 19.5"	98-	**BPWKIT2**	0308835010	WDR555		WDP020K
BPW SKH New type, SB3745, Rigid exc ECO PLUS, with exciter ring	99-	**BPWKIT4**	0308834070	WDR587	0980106430, 0980107250	WDP092K
BPW SKH SB4309 caliper, 430mm dia 285PCD, 10 stud	00-	**BPWKIT8**	0308835060	WDR703	0980106440, 0980107260	WDP094K
BPW SKH, SB 3745, Rigid, exc ECO PLUS, with exciter ring	99-	**BPWKIT3**	0308834010	WDR586	0980106430, 0980107250	WDP092K
BPW SKH, TSB3709 new type calipers, ECO PLUS	10-	**BPWKIT9**	0308834150	WDR586	0980107940, 0980107951	WDP106K
BPW SKH, TSB4309 new type calipers, ECO PLUS	10-	**BPWKIT10**	0308834160	WDR703	0980107960, 0980107971	WDP107K
Hendrickson - Axles						
Hendrickson Intraax axle, includes high tensile bolt kit, SB7000 Caliper	00-	**HENKIT1**	98815-016	WDR700	98881-005	WDP020K
Hendrickson Intraax Conmet alloy hubs SB7000 Calipers	02-	**HENKIT2**	98815-018	WDR701	98881-005	WDP020K
Hendrickson Intraax Conmet alloy hubs with 8mm step mounting face	03-	**HENKIT3**	98815-019	WDR730	98881-005	WDP020K
Hendrickson Intraax fitted with Wabco PAN22.1 calipers	12-	**HENKIT4**	98815-016	WDR700		WDP096K
Meritor/ROR - Axles						
Meritor axle fitted with DX195 calipers	05-	**MERKIT1**	21225115	WDR566	FB4691/15224835APK4	WDP024K
Meritor axle fitted with DX225 calipers	05-	**N/A**			MDP5083	WDP081K
Meritor axle fitted with EX225 calipers	05-	**N/A**			3222G2477	WDP103K
Meritor axle fitted with ELSA VGT195 calipers	05-	**MERKIT2**	21224263	WDR715		WDP095
KHitch- Axles						
TN axles fiited with Wabco Pan 19.1 calipers, non ABS, incl cap screws	98-	**UNIKIT2**	BC8433	WDR705	12999737	WDP090K
TN axles fitted with Wabco PAN 19.1 caliper with 100 tooth ABS, incl cap screws	00-	**UNIKIT3**		WDR702	12999737	WDP090K
TMC-Axles						
TMC axle fitted with conmet alloy hubs	00-	**TMCKIT2**		WDR701		WVP096K
TMC axles fiited with Wabco Pan 19.1 calipers non ABS, incl cap screws	98-	**UNIKIT2**	820105	WDR705	79787364	WDP090K
TMC Wabco PAN 19.1 caliper with 100 tooth ABS, incl cap screws	00-	**UNIKIT3**		WDR702	79787364	WDP090K
SAF-Axles						
SAF Integral 19.5",SAF SK RB 9019 INTRADISC	00-	**SAFKIT3**	4079001001	WDR717	3057008000	WDP090K
SAF Integral 22.5", SK RB 9002 INTRADISC	00-	**SAFKIT4**	4079001300	WDR718	3057008400	WDP096K
SAF Pan 19.1, built in ABS ring 80 teeth	00-	**SAFKIT6**	4079001201	WDR704	3057008000	WDP090K
SAF SB7000, SK RS 11222, 22.5" wheels, SK RZ9019,11019	98-	**SAFKIT5**	4079000300	WDR575		WDP020K
SAF SKRB 9022-9019 (PAN19), 19.5"wheels	98-	**SAFKIT1**	4079000700	WDR611	3057008000	WDP090K
SAF, SK 19" 1/2	00-	**SAFKIT2**	4079000400	WDR716	3057008000	WDP090K
AF B19, BIL9, S19, SIL9, SI11, Z19, ZIL9 19.5" wheels PAN19.1 Wabco calipers & ABS ring	09-	**SAFKIT7**	4079001600	WDR735	3057008000	WDP090K
York-Axles						
York, Wabco Pan 19.1 calipers, non ABS, incl cap screws	98-	**UNIKIT2**	7978731901	WDR705	79787364	WDP090K
York Wabco PAN 19.1 caliper with 100 tooth ABS, incl cap screws	00-	**UNIKIT3**	79787412	WDR702	79787364	WDP090K
York, Wabco PAN22.1 caliper, ABS. 430mm DIA	12-		79789121		79787420	WDP096K

Note: Refer to the Bremsbelage disc rotor catalogue 2012 for full listing on all truck & trailer applications

BREMSBELAGE

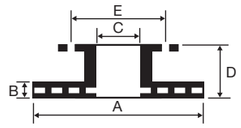

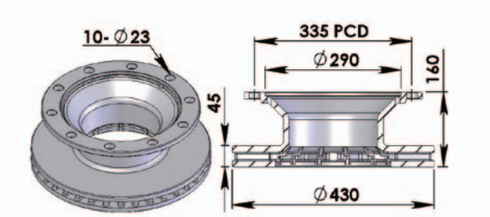

WDR555 BREMSBELAGE

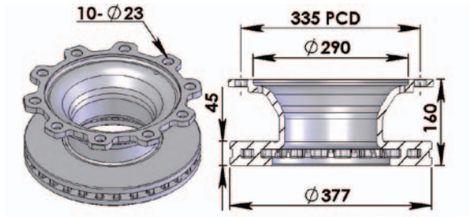

WDR561 BREMSBELAGE

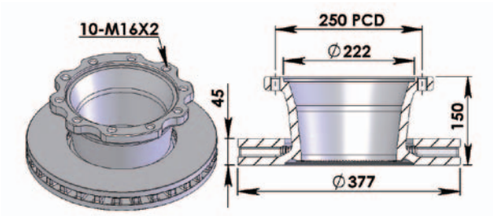

WDR566 BREMSBELAGE

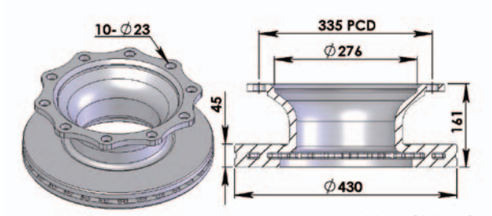

WDR575 BREMSBELAGE

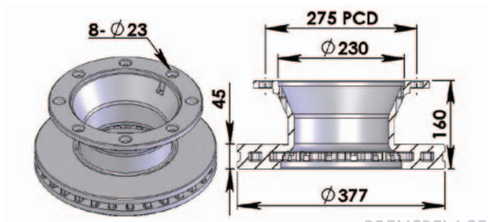

WDR586 BREMSBELAGE

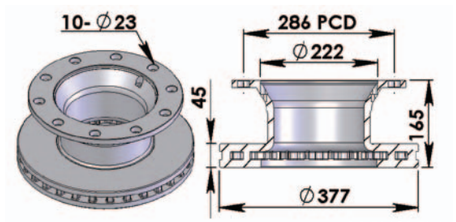

WDR587 BREMSBELAGE

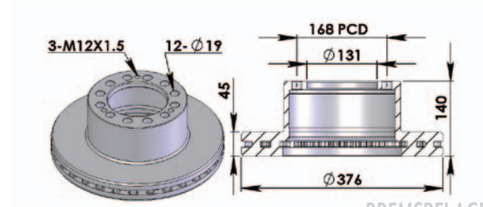

WDR611 BREMSBELAGE

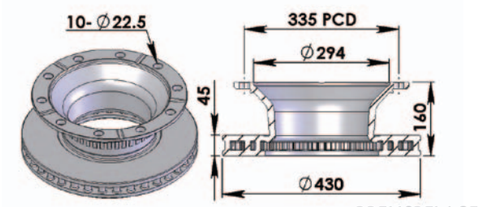

WDR616 BREMSBELAGE

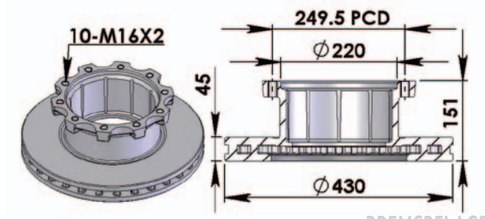

WDR700 BREMSBELAGE

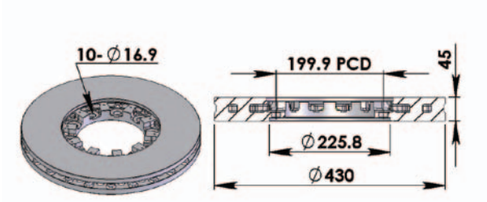

WDR701 BREMSBELAGE

BREMSBELAGE

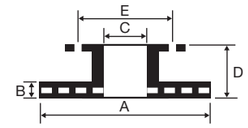

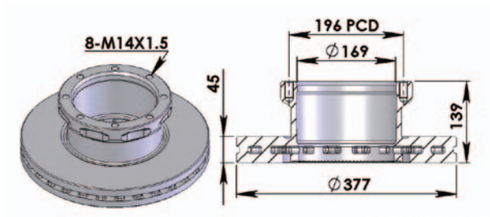

WDR702 BREMSBELAGE

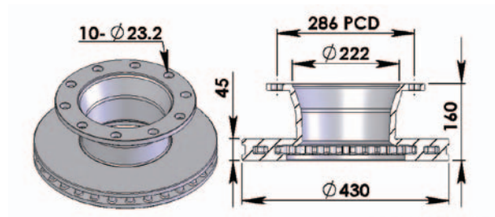

WDR703 BREMSBELAGE

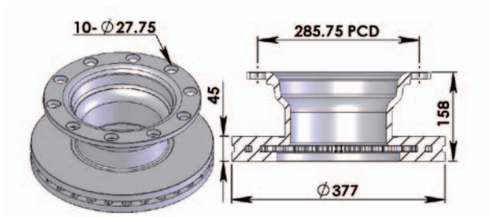

WDR704 BREMSBELAGE

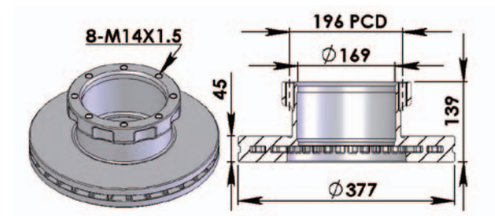

WDR705 BREMSBELAGE

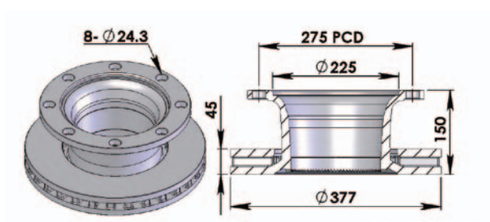

WDR715 BREMSBELAGE

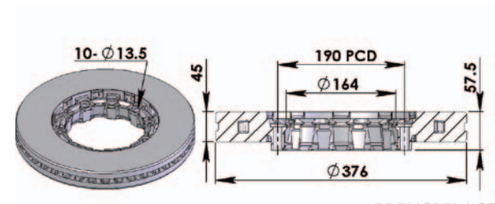

WDR717 BREMSBELAGE

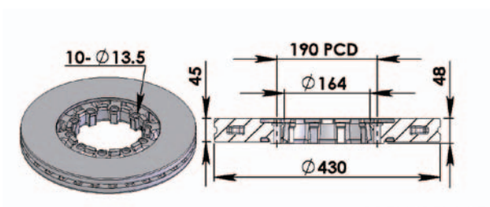

WDR718 BREMSBELAGE

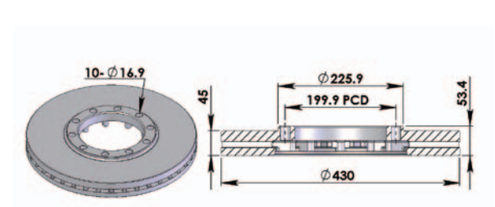

WDR730 BREMSBELAGE

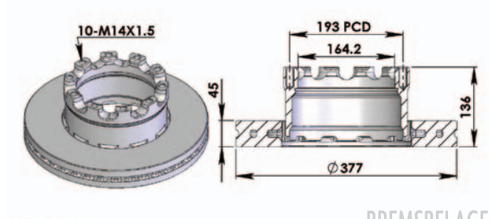

WDR735 BREMSBELAGE

WDP020K WVA 29187/29202/29278, Knorr Bremse SB7, SN7 & SK7 caliper, New Style Protec "S"

WIDTH - 247.5mm
HEIGHT - 107.6mm
THICKNESS - 30mm

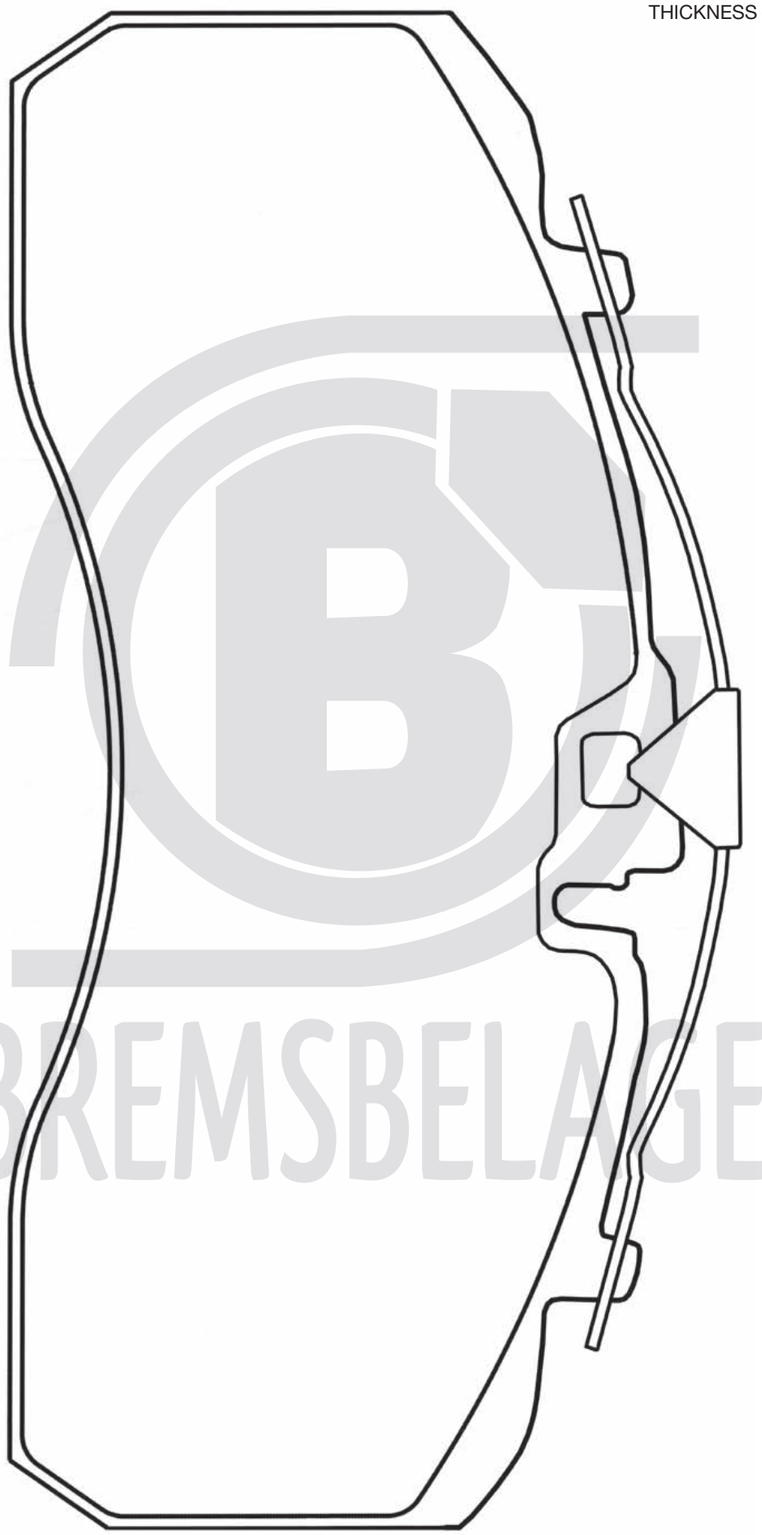

WDP024K WVA29124 Meritor DX195 caliper

WIDTH - 205.4mm
HEIGHT - 102mm
THICKNESS - 27mm

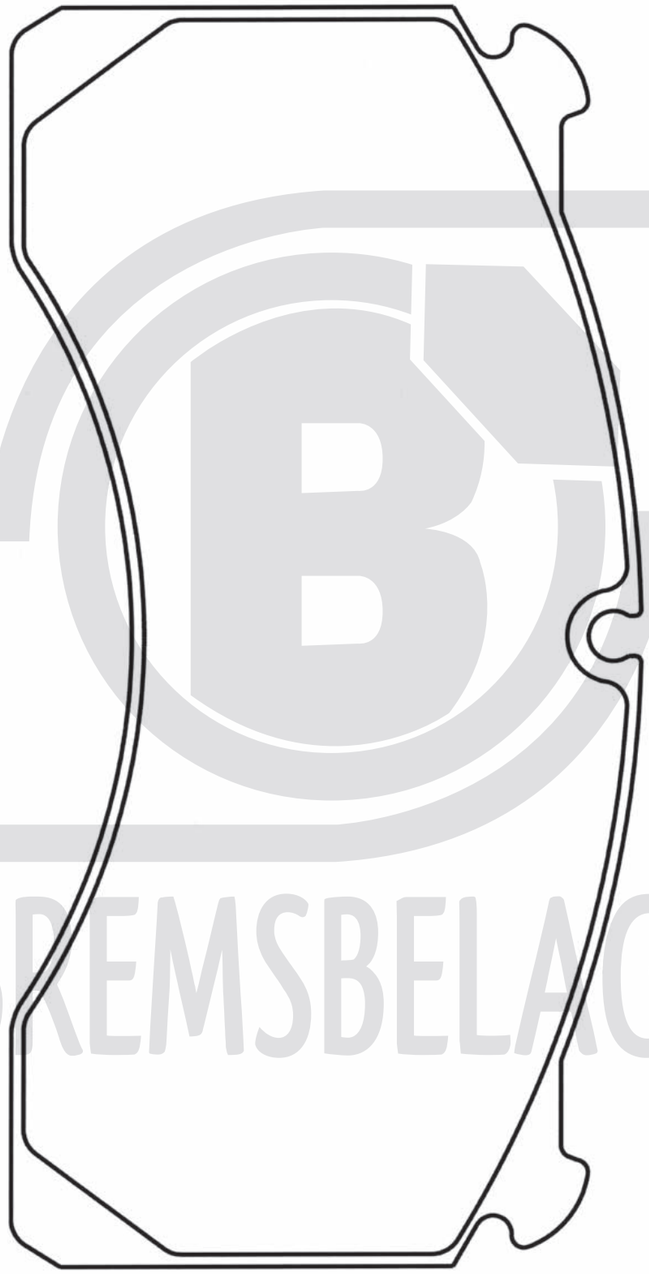

BREMSBELAGE

WDP036K **WVA29095**
Knorr Bremse SB6000 caliper

WIDTH - 210.7mm
HEIGHT - 92.5mm
THICKNESS - 30mm

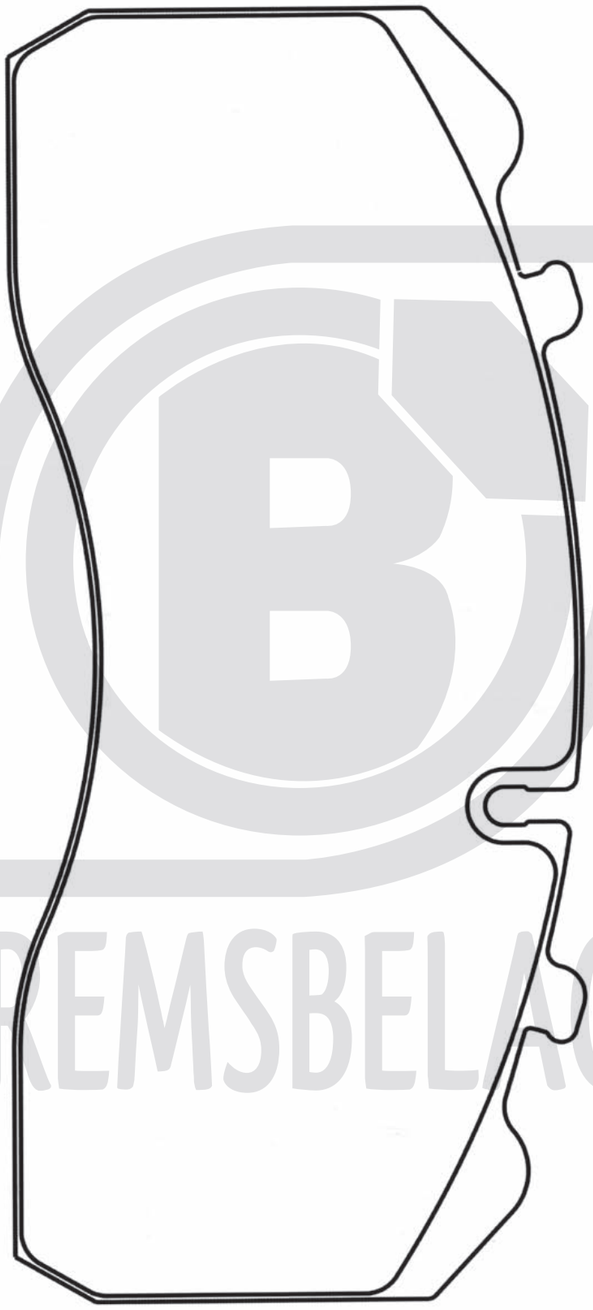

WDP081K **WVA29150**
Meritor DX225 caliper

WIDTH - 235mm
HEIGHT - 110mm
THICKNESS - 30mm

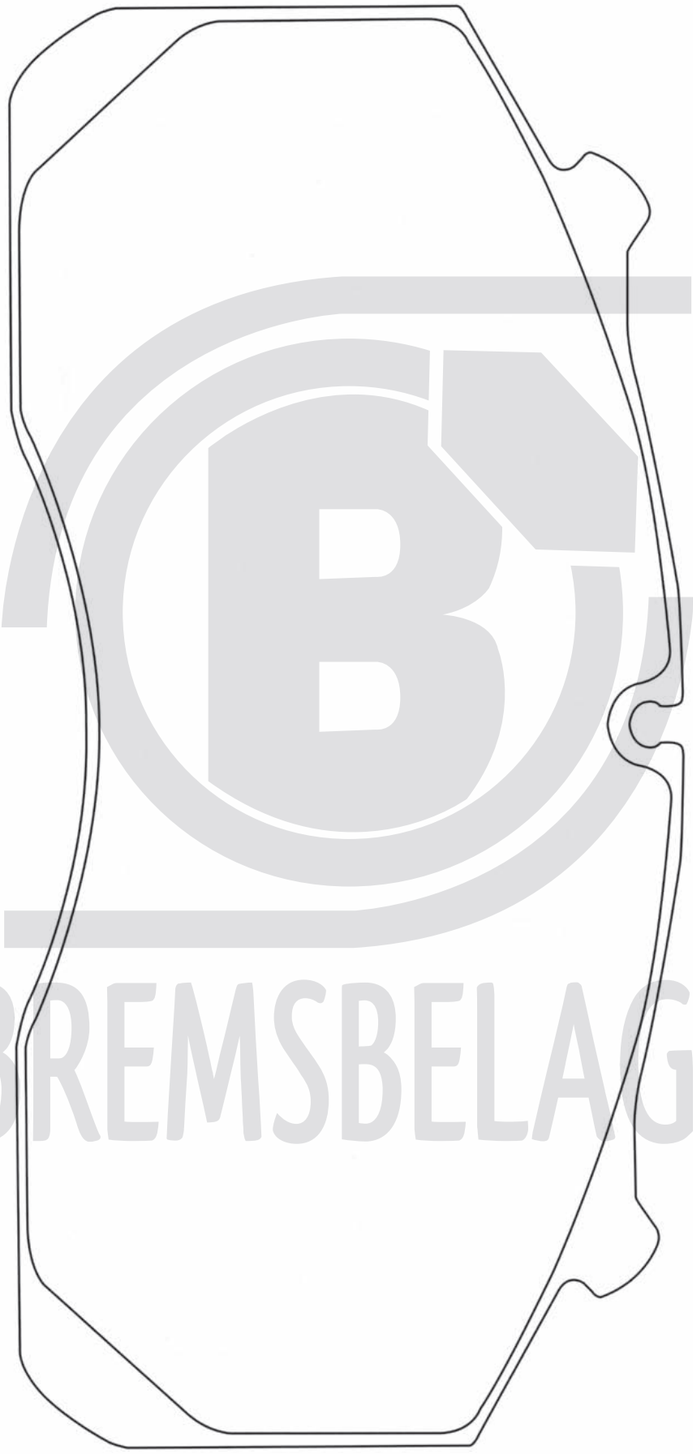

BREMSBELAGE

BREMSBELAGE

WDP089K WVA29143
Haldex DB22 Caliper

WIDTH - 247.5mm
HEIGHT - 105mm
THICKNESS - 30mm

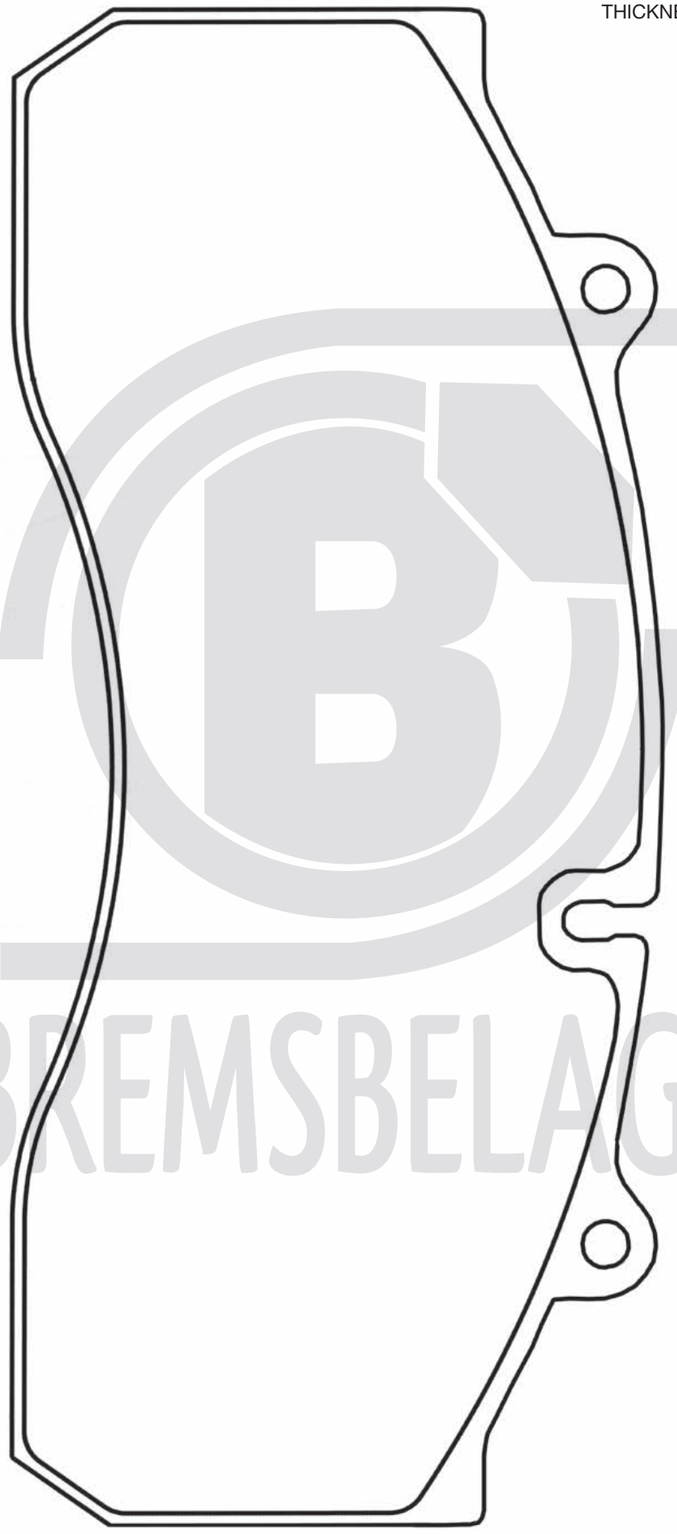

WDP090K WVA29159
Wabco PAN 19.1 caliper

WIDTH - 210.6mm
HEIGHT - 93.2mm
THICKNESS - 29.8mm

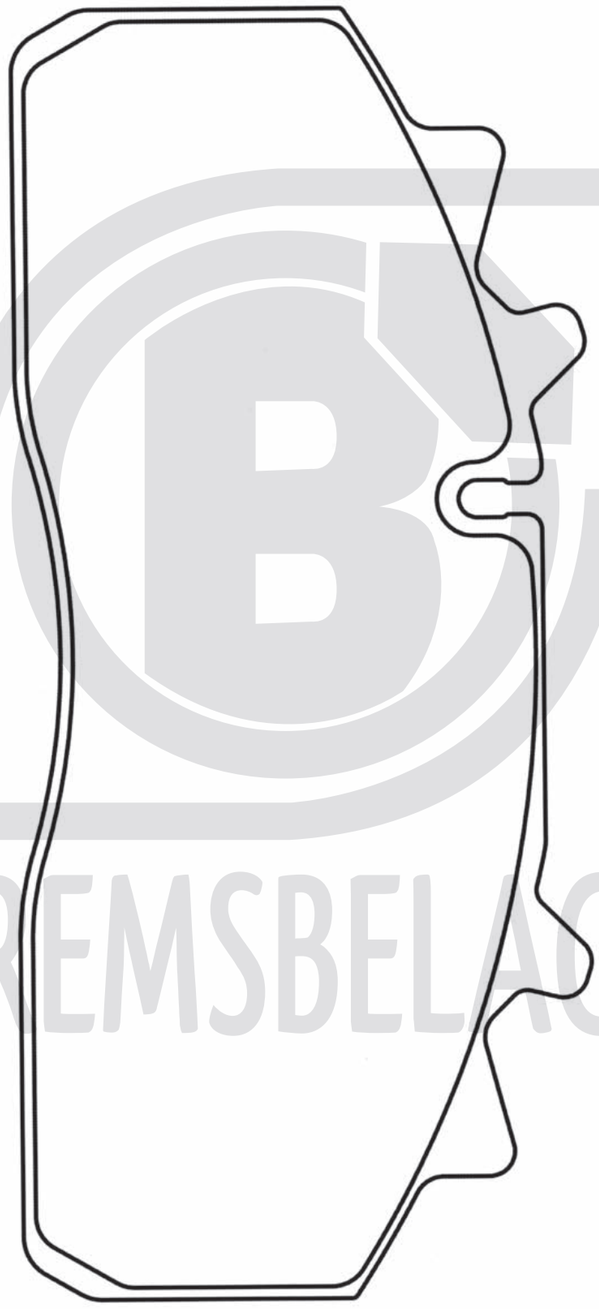

BREMSBELAGE

WDP092K WVA29165
Knorr Bremse SB3745 caliper

WIDTH - 210.9mm
HEIGHT - 92.5mm
THICKNESS - 30mm

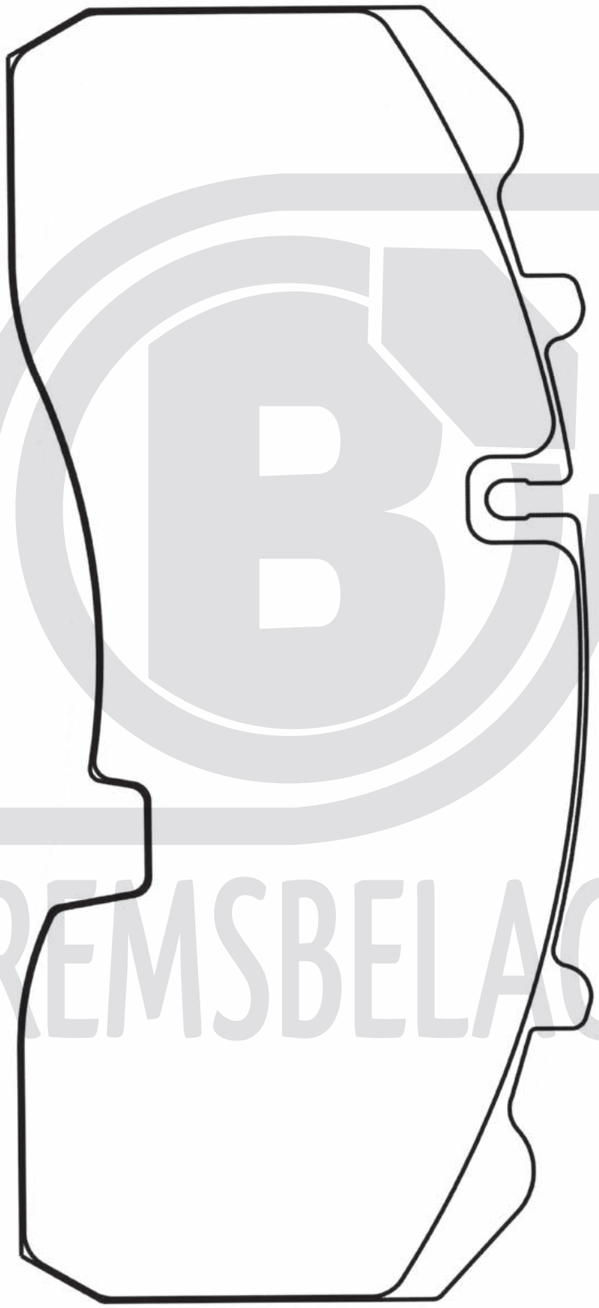

WDP094K WVA29171
Knorr Bremse SB4309 caliper

WIDTH - 210.9mm
HEIGHT - 108.3mm
THICKNESS - 30mm

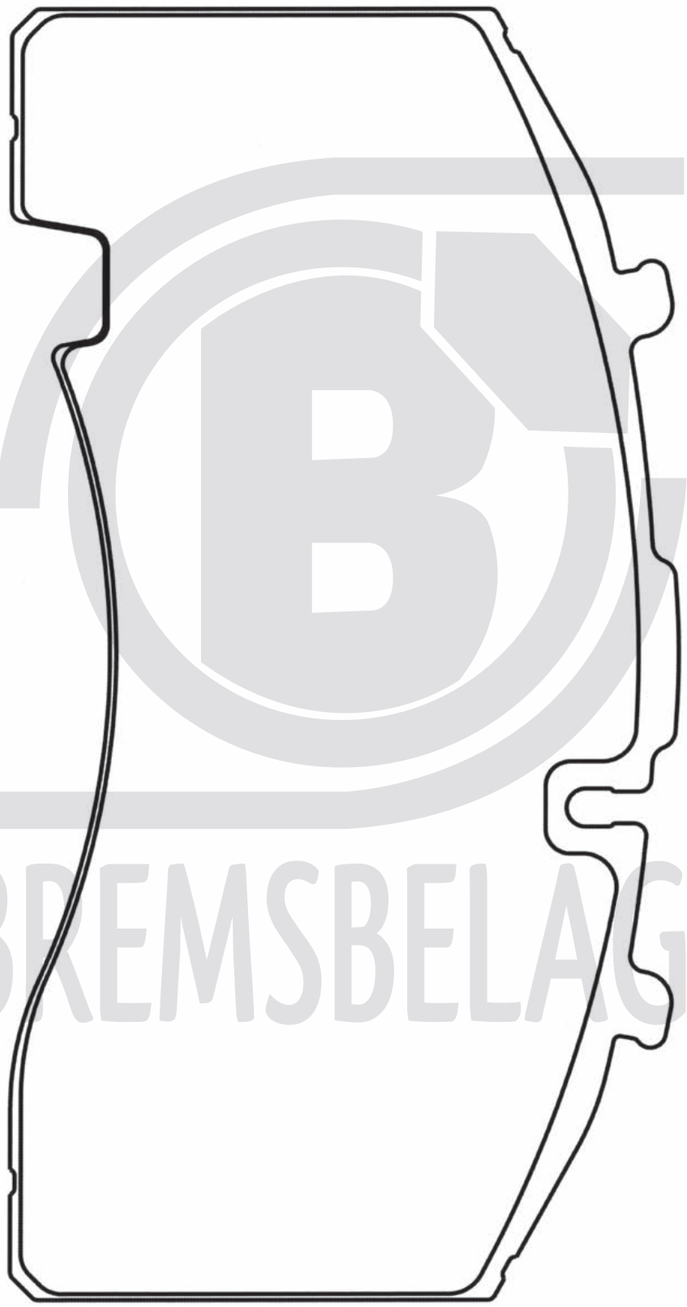

BREMSBELAGE

BREMSBELAGE

WDP095 WVA29177
Meritor ELSA VGT 195 Caliper

WIDTH - 210.6mm
HEIGHT - 99.6mm
THICKNESS - 29.2mm

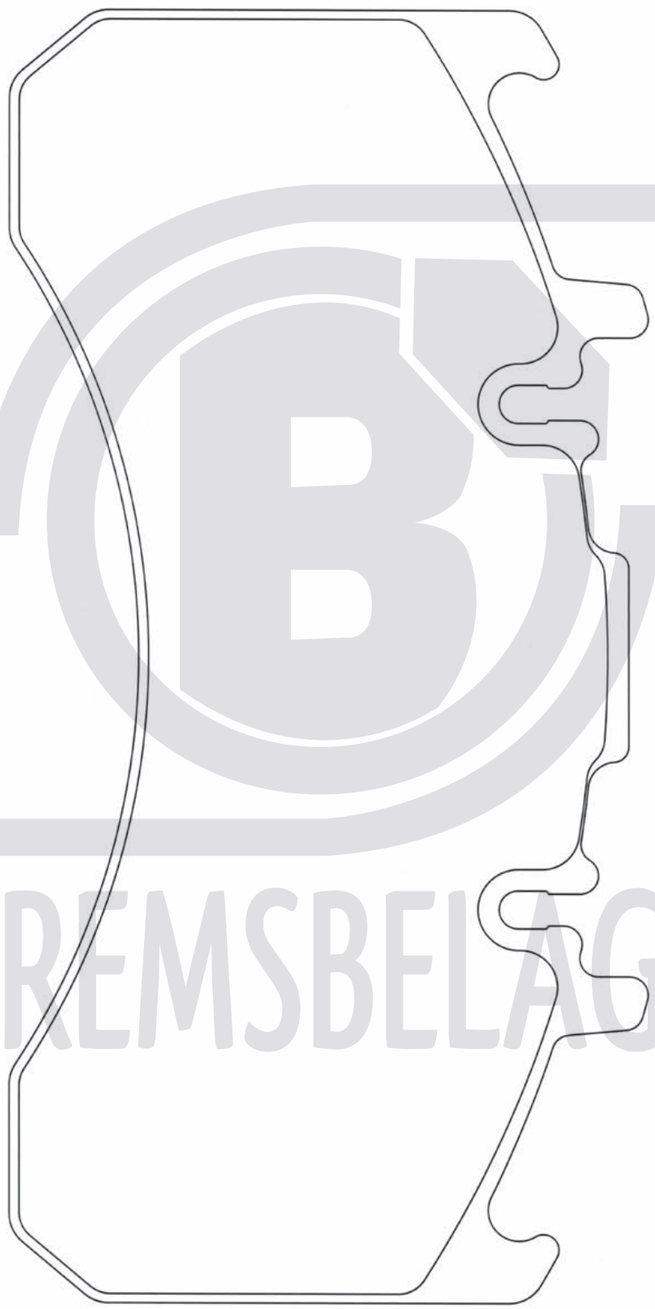

WDP096K WVA29162
Wabco Pan 22-1 Caliper

WIDTH - 210.6mm
HEIGHT - 109.5mm
THICKNESS - 31.7mm

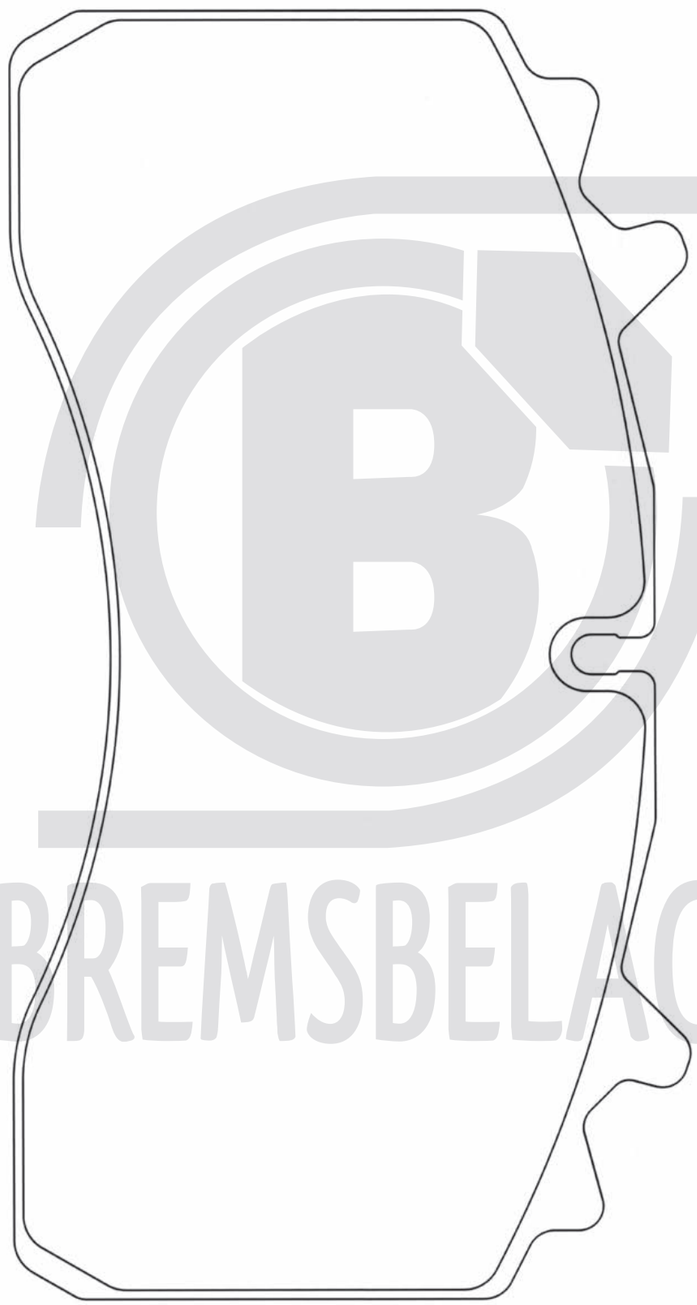

BREMSBELAGE

BREMSBELAGE

WDP102K WVA29181
Haldex DB19 Caliper

WIDTH - 210mm
HEIGHT - 93.2mm
THICKNESS - 30mm

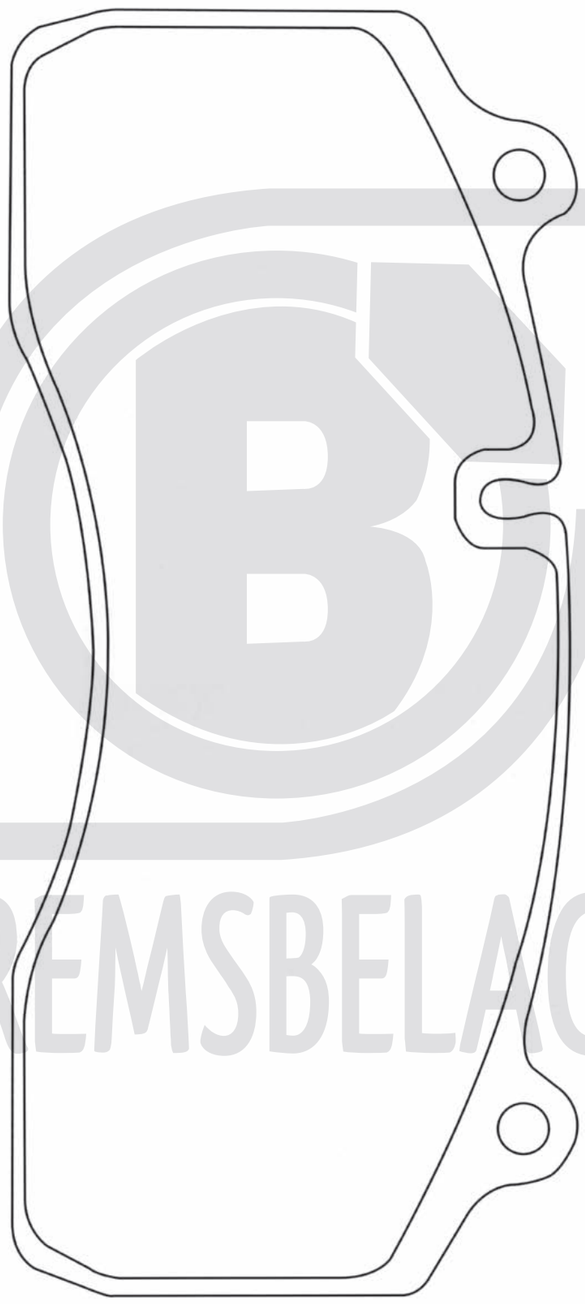

WDP106K WVA29227
BPW TSB3709 Caliper

WIDTH - 210.3mm
HEIGHT - 102mm
THICKNESS - 30mm

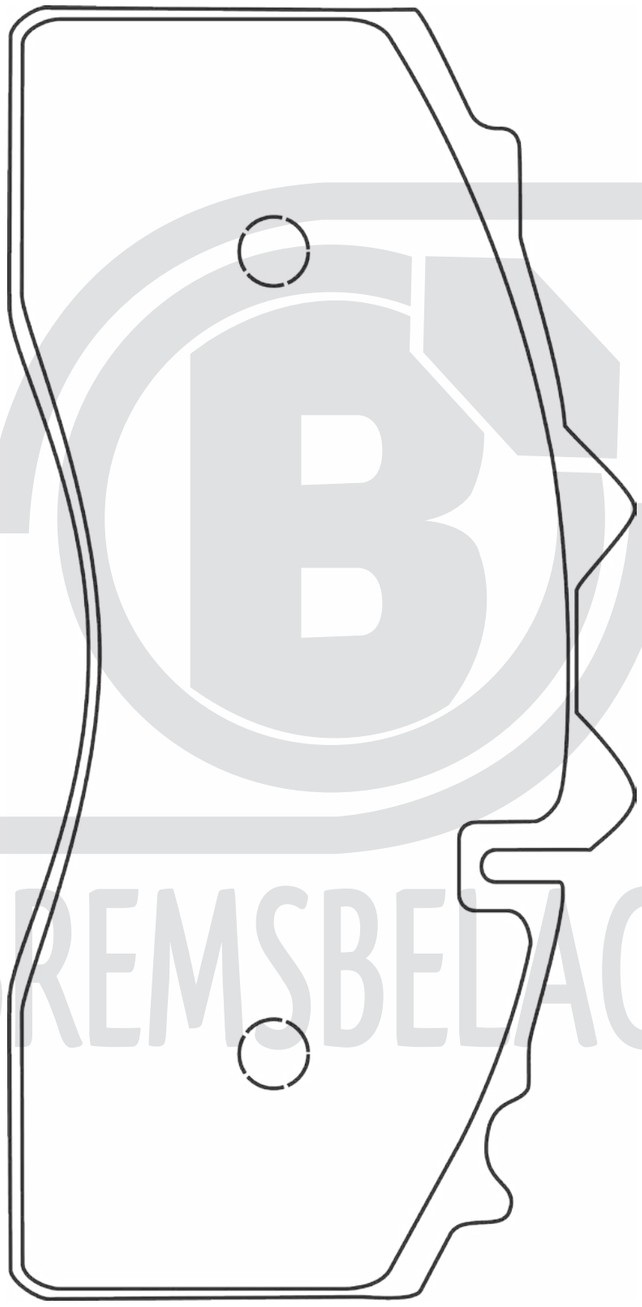

BREMSBELAGE
BREMSBELAGE

WDP107K WVA29228
BPW TSB4309 Caliper

WIDTH - 210.8mm
HEIGHT - 114.5mm
THICKNESS - 30mm

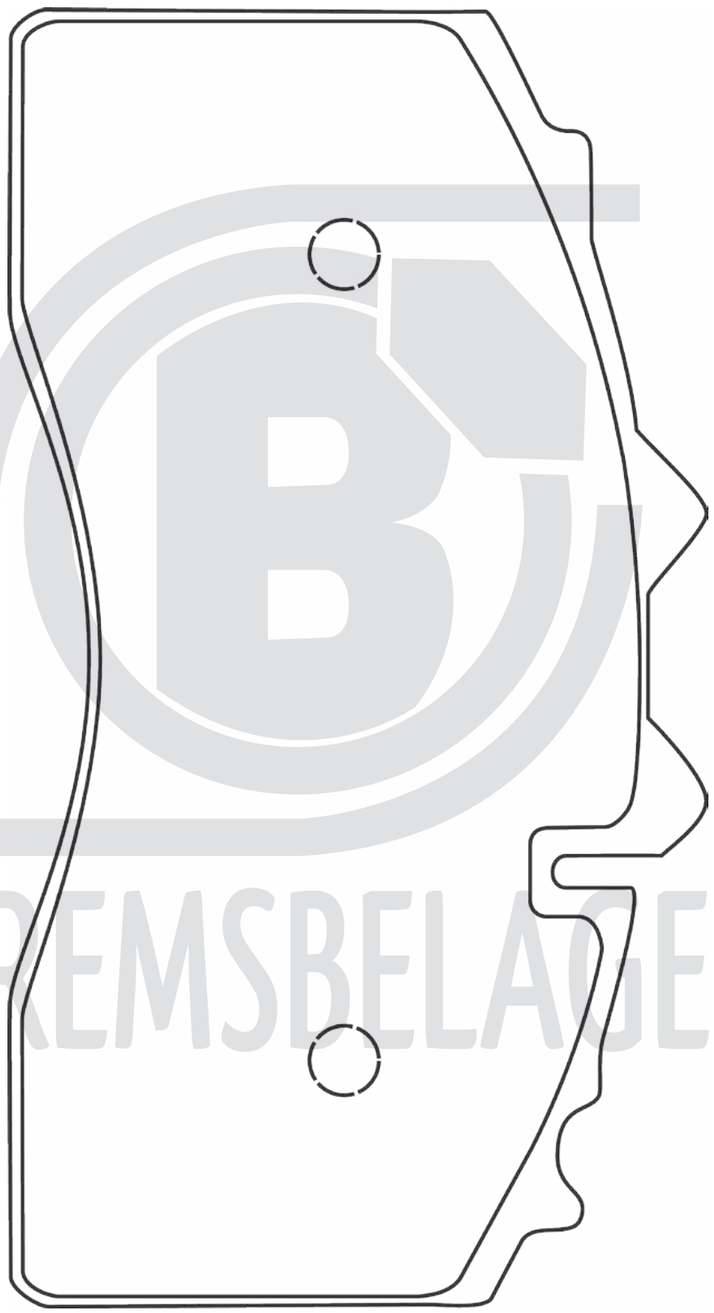

Part No		
WIK 500	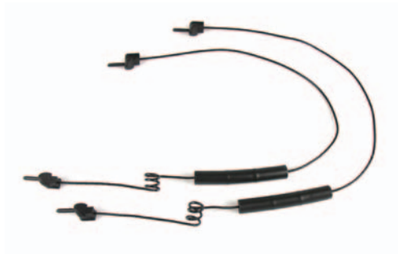	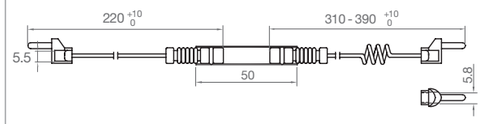
WIK 512		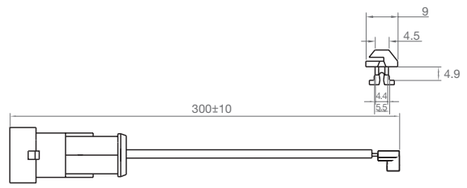
WIK 515		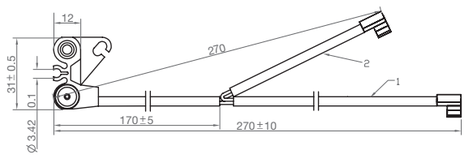
WIK 524		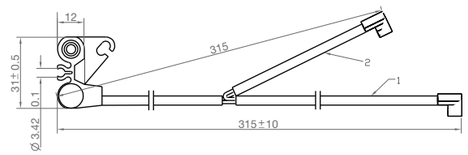
WIK683	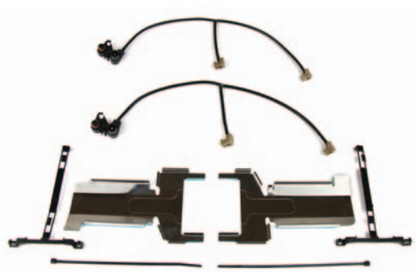	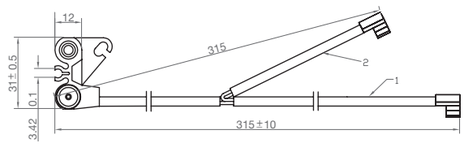

BREMSBELAGE

BREMSBELAGE

CAMSHAFTS

TRUCK APPLICATION - 10 SPLINE BY LENGTH	86-87
TRAILER APPLICATION - 10 SPLINE BY LENGTH	86-91
TRUCK APPLICATION - 28 SPLINE BY LENGTH	90-93
TRAILER APPLICATION - 28 SPLINE BY LENGTH	92-93
TRAILER APPLICATION - 37 SPLINE BY LENGTH	94-95
CAMSHAFT QUICK REFERENCE GUIDE BY LENGTH	96-99
CAMSHAFT NUMERICAL LISTING	100-107

watts

Camshafts

The Watts camshaft is now identified with the new Watts Logo stamped into the "S" cam head. All our camshafts are forged from high quality carbon steel rod and heat treated on both the journals & spline ends.

The camshaft is also machined to OE precision for longer service life. The camshaft also comes in the distinctive Watts Logo packaging to protect the component from damage in transportation.

CAMSHAFT - DRIVE, STEER & TRAILER AXLE APPLICATION LIST

VIEW FROM HEAD END

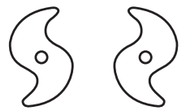

CAM LENGTHS ("A" DIM.) ARE MEASURED FROM UNDER CAM HEAD TO BEGINNING OF CIRCLIP GROOVE

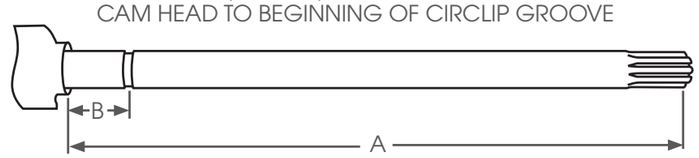

TRUCK APPLICATION - 10 SPLINE BY LENGTH

Part No	POS	A Size - MM	B size - MM	Journal DIA	Spline	Manufacturer	Type	Drum dia	Application	OEM No
WT2019	LH	218	42	38	10	Eaton	Eaton	16-1/2"	Drive Axle	10000087
WT2020	RH	218	42		10					10000088
WT2037	LH	218	44.5	38	10	Meritor	P & QC	16-1/2"	Drive Axle	2210X5640S
WT2038	RH	218	44.5		10					2210W5939R
WT2304	LH	230	48	38	10	Meritor	Q Plus	16-1/2"	Drive Axle	2210G5545
WT2305	RH	230	48		10					2210H5546
WT2013	LH	287	51	38	10	Meritor	P & QC	16-1/2"	Drive Axle	2210X5354
WT2014	RH	287	51		10					2210W5353
WT2021	LH	292	42	38	10	Eaton	Eaton	16-1/2"	Drive Axle	70306
WT2022	RH	292	42		10					70307
WT2031	LH	292	51	38	10	Meritor	P & QC	16-1/2"	Drive Axle	2210D5360SW
WT2032	RH	292	51		10					2210C5359SW
WT2316	LH	364	40	38	10	Eaton	ES	16-1/2"	Drive Axle	807862
WT2317	RH	364	40		10					807863

TRAILER APPLICATION - 10 SPLINE BY LENGTH

Part No	POS	A Size - MM	B size - MM	Journal DIA	Spline	Manufacturer	Type	Drum dia	Application	OEM No
WT2041	LH	419	56	38	10	Meritor	Q Plus	12-1/4"	Trailer Axle	
WT2042	RH	419	56		10					
WT2071	LH	440	46	41	10	Meritor	TN4670	16-1/2"	Trailer Axle	2210M4329
WT2072	RH	440	46		10					2210L4328
WT2017	LH	495	56	41	10	Eaton	Eaton	16-1/2"	Trailer Axle	FL17.635
WT2018	RH	495	56		10					FL17.634
WT2029	LH	516	34	38	10	Freighter/	second circlip groove 56.3mm	12-1/4"	Trailer Axle	FL17.683
WT2030	RH	516	34		10	Ingersoll				FL17.682
WT2011	LH	520	46	38	10	Meritor	ARN, ATN & RL	16-1/2"	Trailer Axle	2210W4183
WT2012	RH	520	46		10					2210V4182
WT2003	LH	521	55	38	10	Meritor	P & QC	16-1/2"	Trailer Axles	2210W2484
WT2004	RH	521	55		10					2210W2483

VIEW FROM HEAD END

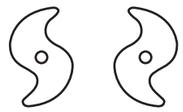

CAM LENGTHS ("A" DIM.) ARE MEASURED FROM UNDER CAM HEAD TO BEGINNING OF CIRCLIP GROOVE

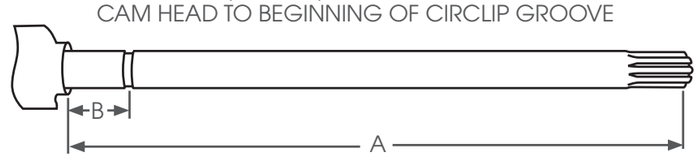

TRAILER APPLICATION - 10 SPLINE BY LENGTH CONTINUED

Part No	POS	A Size - MM	B size - MM	Journal DIA	Spline	Manufacturer	Type	Drum dia	Application	OEM No
WT2035	LH	521	46	42.5mm	10	Meritor	Note: first circlip groove under head 5/16", second circlip groove 2 1/4"	16-1/2"	Trailer Axle	21202755
WT2036	RH	521	46		10					21202754
WT2332	LH	525	55	38	10	York	2950 Axle, 335X210	335mm	Trailer Axle	79790238/01L
WT2333	RH	525	55		10					79790238/01R
WT2005	LH	536	55	38	10	Fruehauf	Early Fruehauf	16-1/2"	Trailer Axles	305680
WT2006	RH	536	55		10				(Round & I Beam Axles)	305681
WT2025	LH	537	56	38	10	Freighter/	Second circlip groove 67.5mm	12-1/4"	Trailer Axle	FB2022
WT2026	RH	537	56		10	Ingersoll				FB2023
WT2338	LH	546	67.5	38	10	Dana-Spicer	Dana-Spicer	12-1/4"	Trailer Axle	M12WK101-1
WT2339	RH	546	67.5		10					M12WK100-1
WT2340	LH	581	56.5	38	10	Meritor/ Dana	P & QC	16-1/2"	Trailer Axles	2210A6345
WT2341	RH	581	56.5		10					2210Z6344
WT2015	LH	585	470	42mm	10	BPW	BPW Old Generation	420mm	Trailer Axle	0509705170
WT2016	RH	585	470		10					0509705180
WT2003F	LH	595	56.5	38	10	Meritor	GP airbag suspension	16-1/2"	Trailer Axles	M16WK103-25
WT2004F	RH	595	56.5		10					M16WK102-25
WT2009	LH	597	56.5	38	10	Ingersoll	P & QC	15'	Trailer Axles	202109-236-LH
WT2010	RH	597	56.5		10					202109-236-RH
WT2344	LH	600	50	45.7mm	10	SAF	RS SK 3090	420mm	Trailer Axle	2262150100
WT2345	RH	OAL:665	50		10					2262150200
WT2346	LH	605	67	43mm	10	ROR	BMX 350X200	350mm	Trailer Axles	21219322
WT2347	RH	605	67		10					21219321
WT2348	LH	607	50	45.7mm	10	SAF	RS SK 9037	420mm	Trailer Axle	2262110902
WT2349	RH	OAL:669			10					2262110802
WT2352	LH	610	56.5	38	10	Meritor	P & QC	16-1/2"	Trailer Axle	2210D6400
WT2353	RH	610	56.5		10	KIC, Sudisa				2210C6399
WT2356	LH	611	43	41	10	Meritor	Q Plus	16-1/2"	Trailer Axle	R607068
WT2357	RH	611	43		10	KIC, Sudisa				R607067
WT2350	LH	616	55	38	10	York	2950 Axle, 335X210	335mm	Trailer Axle	79790238/19L
WT2351	RH	616	55		10					79790238/19R
WT2360	LH	616	54	38mm	10	SAF	RZ10242 & RZ12242, J Series	420mm	Trailer Axle	2262026902

VIEW FROM HEAD END

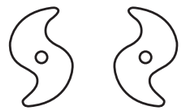

CAM LENGTHS ("A" DIM.) ARE MEASURED FROM UNDER CAM HEAD TO BEGINNING OF CIRCLIP GROOVE

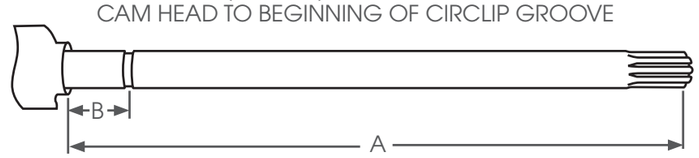

TRAILER APPLICATION - 10 SPLINE BY LENGTH CONTINUED

Part No	POS	A Size - MM	B size - MM	Journal DIA	Spline	Manufacturer	Type	Drum dia	Application	OEM No
WT2361	RH	OAL:668	54		10					2262027002
WT2043	LH	619	41.5	38	10	Dana-Spicer	P & QC	16-1/2"	Trailer Axle	M16WK111-12
WT2044	RH	619	57		10				(Air Suspension)	M16WK110-12
WT2081	LH	622	57	38	10	Meritor	GP, Freighter & York axles	16-1/2"	Trailer Axle	504732-17L
WT2082	RH	622	57		10				(Air Suspension)	504723-17R
WT2075	LH	627	70	38	10	Dana-Spicer	Dana-Spicer	12-1/4"	Trailer Axle	
WT2076	RH	627	70		10					
WT2362	LH	637	50	45.7mm	10	SAF	RS SK 9042	420mm	Trailer Axle	2262111502
WT2363	RH	OAL:698	50		10					2262111402
WT2023	LH	638	522	42mm	10	BPW	New Generation	420mm	Trailer Axle	0509705230
WT2024	RH	638	522		10					0509705240
WT2039	LH	663	548	42mm	10	BPW	New Gen - airbag suspension	420mm	Trailer Axle	0509705260/1
WT2040	RH	663	548		10					0509705250/1
WT2365	LH	731	616	42mm	10	BPW	Lightweight 9000 series single	420mm	Trailer Axle	0509705290/1
WT2366	RH	731	616		10					0509705300/1

TRUCK APPLICATION - 28 SPLINE BY LENGTH

Part No	POS	A Size - MM	B size - MM	Journal DIA	Spline	Manufacturer	Type	Drum dia	Application	OEM No
WT2300	LH	196	46	38	28	Meritor	P & QC	16-1/2"	Front Steer - MACK	2210L7396
WT2301	RH	196	46		28					2210K7395
WT2302	LH	216	46	38	28	Meritor	P & QC	16-1/2"	Drive Axle - MACK	2210F5440
WT2303	RH	216	46		28					2210E5439
WT2077	LH	229	44.5	38	28	Meritor	P & QC	16-1/2"	Drive Axle - MACK	98-1210L
WT2078	RH	229	44.5		28					98-1210R
WT2306	LH	238	46	38	28	Meritor	Q Plus	16-1/2"	Drive Axle	2210Q7453
WT2307	RH	238	46		28					2210P7452
WT2308	LH	250	44.5	38	28	Meritor	Q Plus	16-1/2"	Drive Axle	2210L7474
WT2309	RH	250	44.5		28					2210K7473
WT2310	LH	265	46	38	28	Meritor	Q Plus	16-1/2"	Drive Axle	2210E7493
WT2311	RH	265	46		28					2210D7492
WT2095	LH	278	46	38	28	Meritor	P & QC	16-1/2"	Drive Axle	2210T5324S
WT2096	RH	278	46		28					2210S5323S

VIEW FROM HEAD END

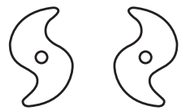

CAM LENGTHS ("A" DIM.) ARE MEASURED FROM UNDER CAM HEAD TO BEGINNING OF CIRCLIP GROOVE

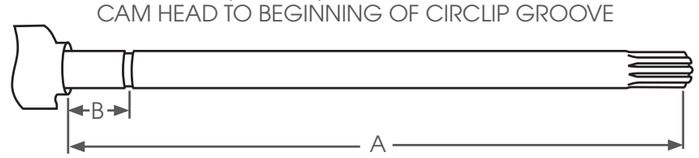

TRUCK APPLICATION - 28 SPLINE BY LENGTH CONTINUED

Part No	POS	A Size - MM	B size - MM	Journal DIA	Spline	Manufacturer	Type	Drum dia	Application	OEM No
WT2312	LH	278	46	38	28	Meritor	Q Plus	16-1/2"	Drive Axle	2210A7515
WT2313	RH	278	46		28					2210Z7514
WT2033	LH	292	44.5	38	28	Meritor	Q Plus	16-1/2"	Drive Axle	2210B5332SW
WT2034	RH	292	44.5		28					2210A5331SW
WT2314	LH	304	44.5	38	28	Meritor	Q Plus	16-1/2"	Drive Axle	2210L7552
WT2315	RH	304	44.5		28					2210K7551
WT2073	LH	356	44.5	38	28	Meritor	P & QC	16-1/2"	Drive Axle	
WT2074	RH	356	44.5		28					
WT2083	LH	357	44.5	38	28	Meritor	Q Plus	16-1/2"	Drive Axle	2210J7628
WT2084	RH	357	44.5		28					2210H7626
WT2318	LH	370	44.5	38	28	Meritor	Q Plus	16-1/2"	Drive Axle	2210A7645
WT2319	RH	370	44.5		28					2210Z7644
WT2322	LH	381	44.5	38	28	Meritor	Q Plus	16-1/2"	Drive Axle	2210Q7661
WT2323	RH	381	44.5		28					2210P7660
WT2324	LH	387	44.5	38	28	Meritor	Q Plus	16-1/2	Drive Axle	2210A7671
WT2325	RH	387	44.5		28					2210Z7670
WT2326	LH	402	44.5	38	28	Meritor	Q Plus	16-1/2"	Drive Axle	2210W7693
WT2327	RH	402	44.5		28					2210V7692

TRAILER APPLICATION - 28 SPLINE BY LENGTH

Part No	POS	A Size - MM	B size - MM	Journal DIA	Spline	Manufacturer	Type	Drum dia	Application	OEM No
WT2045	LH	280		38	28	Hendrickson	Intraax	16-1/2"	Trailer Axle	S-24636-1L
WT2046	RH	280			28					S-24636-1R
WT2330	LH	518	56	38	28	Dana-Spicer	12 1/4" brakes	12-1/4"	Trailer Axle	BRB7008L
WT2331	RH	518	56		28					BRB7008R
WT2334	LH	518	50	41	28	Meritor	P & QC	16-1/2"	Trailer Axle	2210G6871
WT2335	RH	518	50		28					2210F6870
WT2027	LH	521	44	41	28	Meritor	4000, ATN, ARN, TN & 6000 Series	16-1/2"	Trailer Axle	2210R4334
WT2028	RH	521	44		28					2210Q4333
WT2342	LH	598	44	41	28	Dana-Spicer	Xtralife with 1 5/8" bearing	16-1/2"	Trailer Axle	M16WKL25-236
WT2343	RH	598	44		28					M16WKR25-236
WT2358	LH	611	50	41	28	Meritor	Q Plus	16-1/2"	Trailer Axle	2210E6869
WT2359	RH	611	50		28					2210D6868

VIEW FROM HEAD END

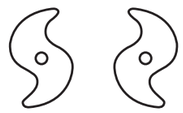

CAM LENGTHS ("A" DIM.) ARE MEASURED FROM UNDER CAM HEAD TO BEGINNING OF CIRCLIP GROOVE

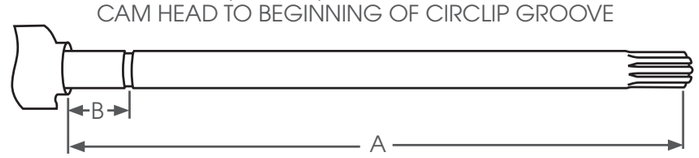

TRAILER APPLICATION - 37 SPLINE BY LENGTH

Part No	POS	A Size - MM	B size - MM	Journal DIA	Spline	Manufacturer	Type	Drum dia	Application	OEM No
WT2007	LH	410	55	41	37	Fruehauf	Fruehauf-Propar	16-1/2"	Trailer Axle	AXA0420-1
WT2008	RH	410	55		37		Note: S cam dia at head 1 5/8" with a spline dia 41mm			AXA0420-2
WT2001	LH	537	55	41	37	Fruehauf	Propar	16-1/2"	Trailer Axle	AXA0420-3
WT2002	RH	537	55		37		Note: S cam dia at head 1 5/8" with a spline dia 41mm			AXA0420-4
WT2336	LH	538	55	41	37	Fruehauf	Fruehauf-Propar	12-1/4"	Trailer Axle	ACD2193-6
WT2337	RH	538	55		37		Note: S cam dia at head 1 5/8" with a spline dia 41mm			ACD2193-5
WT2085	LH	606	54	41	37	Fruehauf	Propar	16-1/2"	Trailer Axle	AXA0420-6
WT2086	RH	606	54		37		Airbag suspension			AXA0420-5

CAMSHAFT QUICK REFERENCE GUIDE BY LENGTH

VIEW FROM HEAD END

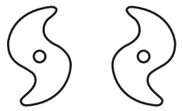

CAM LENGTHS ("A" DIM.) ARE MEASURED FROM UNDER CAM HEAD TO BEGINNING OF CIRCLIP GROOVE

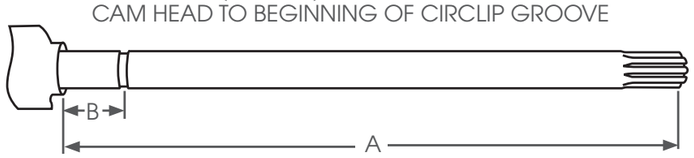

Length MM	Journal DIA	Spline	Watts	POS	Mfg	Type	Drum dia	Application
196	1 -1/2"	1-1/2-28	WT2300	LH				
			WT2301	RH	Meritor	P & Q	16-1/2"	Drive Axle
216	1-1/2"	1-1/2-28	WT2302	LH				
			WT2303	RH	Meritor	P & Q	16-1/2"	Drive Axle
218	1-1/2"	1-1 /2 -10	WT2019	LH				
			WT2020	RH	Eaton	Eaton	16-1/2"	Drive Axle
218	1-1/2"	1-1/2-10	WT2037	LH				
			WT2038	RH	Meritor	P & Q	16-1/2"	Drive Axle
229	1-1/2"	1-1/2-28	WT2077	LH				
			WT2078	RH	Meritor	P & Q	16-1/2"	Drive Axle
230	1-1/2"	1-1/2-10	WT2304	LH				
			WT2305	RH	Meritor	Q Plus	16-1/2"	Drive Axle
238	1-1/2"	1-1/2-28	WT2306	LH				
			WT2307	RH	Meritor	Q Plus	16-1/2"	Drive Axle
250	1-1/2"	1-1/2-28	WT2308	LH				
			WT2309	RH	Meritor	Q Plus	16-1/2"	Drive Axle
265	1-1/2"	1-1/2-28	WT2310	LH				
			WT2311	RH	Meritor	Q Plus	16-1/2"	Drive Axle
278	1-1/2"	1-1/2-28	WT2095	LH				
			WT2096	RH	Meritor	P & Q	16-1/2"	Drive Axle
278	1-1/2"	1-1/2-28	WT2312	LH				
			WT2313	RH	Meritor	Q Plus	16-1/2"	Drive Axle
280	1-1/2"	1-1/2-28	WT2045	LH				
			WT2046	RH	Hendrickson	Intraax	16-1/2"	Trailer
287	1-1/2"	1-1/2-10	WT2013	LH				
			WT2014	RH	Meritor	P & Q	16-1/2"	Drive Axle
292	1-1/2"	1-1/2-10	WT2031	LH				
			WT2032	RH	Meritor	P & Q	16-1/2"	Drive Axle
292	1-1/2"	1-1/2-10	WT2021	LH				
			WT2022	RH	Eaton	Eaton	16-1/2"	Drive Axle
292	1-1/2"	1-1/2-28	WT2033	LH				
			WT2034	RH	Meritor	Q Plus	16-1/2"	Drive Axle
304	1-1/2"	1-1/2-28	WT2314	LH				
			WT2315	RH	Meritor	Q Plus	16-1/2"	Drive Axle

Length MM	Journal DIA	Spline	Watts	POS	Mfg	Type	Drum dia	Application
356	1-1/2"	1-1/2-28	WT2073	LH				
			WT2074	RH	Meritor	P & Q	16-1/2"	Drive Axle
357	1-1/2"	1-1/2-28	WT2083	LH				
			WT2084	RH	Meritor	Q Plus	16-1/2"	Drive Axle
364	1-1/2"	1-1/2-10	WT2316	LH				
			WT2317	RH	Eaton	ES	16-1/2"	Drive Axle
370	1-1/2"	1-1/2-28	WT2318	LH				
			WT2319	RH	Meritor	Q Plus	16-1/2"	Drive Axle
381	1-1/2"	1-1/2-28	WT2322	LH				
			WT2323	RH	Meritor	Q Plus	16-1/2"	Drive Axle
387	1-1/2"	1-1/2-28	WT2324	LH				
			WT2325	RH	Meritor	Q Plus	16-1/2	Drive Axle
402	1-1/2"	1-1/2-28	WT2326	LH				
			WT2327	RH	Meritor	Q Plus	16-1/2"	Drive Axle
410	1-5/8"	1-5/8-37	WT2328	LH				
			WT2329	RH	Fruehauf	Fruehauf-Propar	16-1/2"	Trailer Axle
419	1-1/2"	1-1/2-10	WT2041	LH				
			WT2042	RH	Meritor	P & Q	16-1/2"	Drive Axle
419	1-1/2"	1-1/2-10	WT2041	LH				
			WT2042	RH	Meritor	Q Plus	12-1/4"	Trailer Axle
440	1-5/8"	1-1/2-28	WT2071	LH				
			WT2072	RH	Meritor	P & Q	16-1/2"	Trailer Axle
495	1-5/8"	1-1/2-10	WT2017	LH				
			WT2018	RH	Eaton	Eaton	16-1/2"	Trailer Axle
516	1-1/2"	1-1 /2 -10	WT2029	LH				
			WT2030	RH	Ingersoll	Ingersoll	12-1/4"	Trailer Axle
518	1-1/2"	1-1/2-28	WT2330	LH				
			WT2331	RH	Dana-Spicer	Dana-Spicer	12-1/4"	Trailer Axle
518	1-1/2"	1-1/2-10	WT2332	LH				
			WT2333	RH	York	York	335mm	Trailer Axle
518	1-5/8"	1-1/2-28	WT2334	LH				
			WT2335	RH	Meritor	P & Q	16-1/2"	Trailer Axle

CAMSHAFT QUICK REFERENCE GUIDE BY LENGTH

VIEW FROM HEAD END

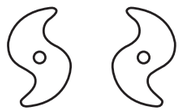

CAM LENGTHS ("A" DIM.) ARE MEASURED FROM UNDER CAM HEAD TO BEGINNING OF CIRCLIP GROOVE

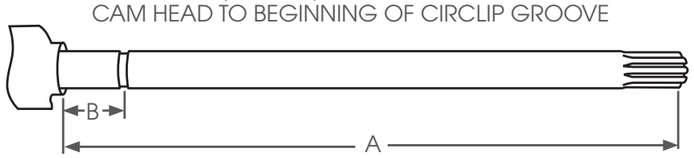

Length MM	Journal DIA	Spline	Watts	POS	Mfg	Type	Drum dia	Application
520	1-1/2"	1-1 /2 -10	WT2011	LH				
			WT2012	RH	Meritor	P & Q	16-1/2"	Trailer Axle
521	1-1/2"	1-1 /2 -10	WT2003	LH				
			WT2004	RH	Meritor	P & Q	16-1/2"	Trailer Axles
521	42.5mm	1-1 /2 -10	WT2035	LH				
			WT2036	RH	Meritor	P & Q	16-1/2"	Trailer Axle
521	1-5/8"	1-1/2-28	WT2027	LH				
			WT2028	RH	Meritor	P & Q	16-1/2"	Trailer Axle
536	1-1/2"	1-1 /2 -10	WT2005	LH				
			WT2006	RH	Fruehauf	Fruehauf	16-1/2"	Trailer Axles
537	1-112"	1-1 /2 -10	WT2025	LH				(Round & I Beam Axles)
			WT2026	RH	Ingersoll	Ingersoll	12-1/4"	Trailer Axle
537	1-5/8"	1-5/8-37	WT2001	LH				
			WT2002	RH	Fruehauf	Fruehauf-Propar	16-1/2"	Trailer Axle
538	1-5/8"	1-5/8-37	WT2336	LH				
			WT2337	RH	Fruehauf	Fruehauf-Propar	12-1/4"	Trailer Axle
546	1-1/2"	1-1 /2 -10	WT2338	LH				
			WT2339	RH	Dana-Spicer	Dana-Spicer	12-1/4"	Trailer Axle
581	1-1/2'	1-1/2-10	WT2340	LH				
			WT2341	RH	Meritor	P & Q	16-1/2"	Trailer Axles
585	42mm	42mm-10	WT2015	LH				
			WT2016	RH	BPW	BPW	420mm	Trailer Axle
595	1-1/2"	1-1/2-10	WT2003F	LH				
			WT2004F	RH	GP	P&Q	16-1/2"	Trailer Axles
597	1-1/2"	1-1 /2 -10	WT2009	LH				
			WT2010	RH	Ingersoll	P & Q	15'	Trailer Axles
598	1-5/8"	1-1/2-28	WT2342	LH				
			WT2343	RH	Dana-Spicer	Dana-Spicer	16-1/2"	Trailer Axle
600	45.7mm	38mm-10	WT2344	LH				
			WT2345	RH	SAF	SAF 9030	420mm	Trailer Axle

Length MM	Journal DIA	Spline	Watts	POS	Mfg	Type	Drum dia	Application
605	43mm	1-1/2-10	WT2346	LH				
			WT2347	RH	ROR	BMX	350mm	Trailer Axles
606	1-5/8"	1-1/2-37	WT2085	LH				
			WT2086	RH	Fruehauf	Fruehauf-Propar	16-1/2"	Trailer Axle
607	45.7mm	38mm-10	WT2348	LH				
			WT2349	RH	SAF	SAF 9037	420mm	Trailer Axle
610	1-1/2"	1-1/2-10	WT2350	LH				
			WT2351	RH	York	York	335mm	Trailer Axle
610	1-1/2"	1-1/2-10	WT2352	LH				
			WT2353	RH	Meritor	P & Q	16-1/2"	Trailer Axle
611	1-5/8"	1-1/2-10	WT2356	LH				
			WT2357	RH	Meritor	Q Plus	16-1/2"	Trailer Axle
611	1-5/8"	1-1/2-28	WT2358	LH				
			WT2359	RH	Meritor	Q Plus	16-1/2"	Trailer Axle
616	38mm	38mm-10	WT2360	LH				
			WT2361	RH	SAF	J - Series	420mm	Trailer Axle
619	1-1/2"	1-1 /2 -10	WT2043	LH				
			WT2044	RH	Dana-Spicer	P & Q	16-1/2"	Trailer Axle
622	1-1/2"	1-1/2-10	WT2081	LH				(Air Suspension)
			WT2082	RH	GP	P&Q	16-1/2"	Trailer Axle
627	1-1/2"	1-1 /2 -10	WT2075	LH				(Air Suspension)
			WT2076	RH	Dana-Spicer	Dana-Spicer	12-1/4"	Trailer Axle
637	45.7mm	38	WT2362	LH				
			WT2363	RH	SAF	SAF 9042	420mm	Trailer Axle
638	42mm	42mm-10	WT2023	LH				
			WT2024	RH	BPW	BPW	420mm	Trailer Axle
663	42mm	42mm-10	WT2039	LH				
			WT2040	RH	BPW	BPW	420mm	Trailer Axle
731	42mm	42mm-10	WT2365	LH				
			WT2366	RH	BPW	BPW	420mm	Trailer Axle

VIEW FROM HEAD END

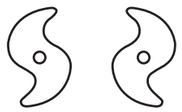

CAM LENGTHS ("A" DIM.) ARE MEASURED FROM UNDER CAM HEAD TO BEGINNING OF CIRCLIP GROOVE

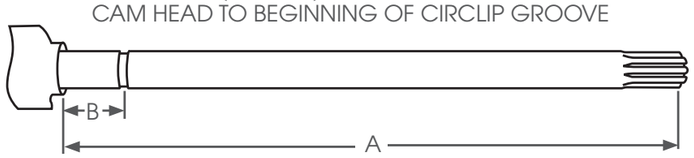

Watts	POS	A Size - MM	B size - MM	Journal DIA	Spline	Manufacturer	Drum dia	OEM #
WT2001	LH	537	55	1-5/8"	1-5/8-37	Fruehauf	16-1/2"	AXA0420-3
WT2002	RH		55					AXA0420-4
WT2003	LH	521	55	1-1/2"	1-1 /2 -10	Meritor	16-1/2"	2210W2484
WT2003F	LH	595	56.5	1-1/2"	1-1/2-10	Meritor	16-1/2"	M16WK103-25
WT2004	RH		55					2210W2483
WT2004F	RH		56.5					M16WK102-25
WT2005	LH	536	55	1-1/2"	1-1 /2 -10	Fruehauf	16-1/2"	305680
WT2006	RH		55					305681
WT2007	LH	410	55	1-5/8"	1-5/8-37	Fruehauf	16-1/2"	AXA0420-1
WT2008	RH		55					AXA0420-2
WT2009	LH	597	56.5	1-1/2"	1-1 /2 -10	Ingersoll	12'	202109-236-LH
WT2010	RH		56.5					202109-236-RH
WT2011	LH	520	46	1-1/2"	1-1 /2 -10	Meritor	16-1/2"	2210W4183
WT2012	RH		46					2210V4182
WT2013	LH	287	51	1-1/2"	1-1/2-10	Meritor	16-1/2"	2210X5354
WT2014	RH		51					2210W5353
WT2015	LH	585	470	42mm	42mm-10	BPW	420mm	0509705170
WT2016	RH		470					0509705180
WT2017	LH	495	56	1-5/8"	1-1/2-10	Eaton	16-1/2"	FL17.635
WT2018	RH		56					FL17.634
WT2019	LH	218	42	1-1/2"	1-1 /2 -10	Eaton	16-1/2"	10000087
WT2020	RH		42					10000088
WT2021	LH	292	42	1-1/2"	1-1/2-10	Eaton	16-1/2"	70306
WT2022	RH		42					70307
WT2023	LH	638	522	42mm	42mm-10	BPW	420mm	0509705230
WT2024	RH		522					0509705240
WT2025	LH	537	56	1-112"	1-1 /2 -10	Freighter/	12-1/4"	FB2022
WT2026	RH		56			Ingersoll		FB2023
WT2027	LH	521	44	1-5/8"	1-1/2-28	Meritor	16-1/2"	2210R4334
WT2028	RH		44					2210Q4333
WT2029	LH	516	34	1-1/2"	1-1 /2 -10	Freighter/	12-1/4"	FL17.683
WT2030	RH		34			Ingersoll		FL17.682
WT2031	LH	292	51	1-1/2"	1-1/2-10	Meritor	16-1/2"	2210D5360SW
WT2032	RH		51					2210C5359SW

VIEW FROM HEAD END

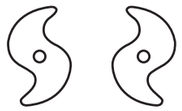

CAM LENGTHS ("A" DIM.) ARE MEASURED FROM UNDER CAM HEAD TO BEGINNING OF CIRCLIP GROOVE

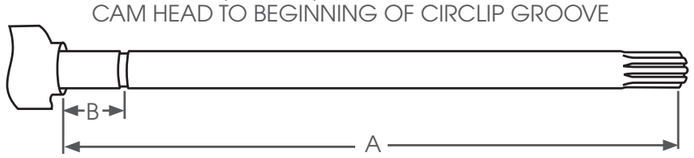

Watts	POS	A Size - MM	B size - MM	Journal DIA	Spline	Manufacturer	Drum dia	OEM #
WT2033	LH	292	44.5	1-1/2"	1-1/2-28	Meritor	16-1/2"	2210B5332SW
WT2034	RH		44.5					2210A5331SW
WT2035	LH	521	46	42.5mm	1-1 /2 -10	Meritor	16-1/2"	21202755
WT2036	RH		46					21202754
WT2037	LH	218	44.5	1-1/2"	1-1/2-10	Meritor	16-1/2"	2210X5640S
WT2038	RH		44.5					2210W5939R
WT2039	LH	663	548	42mm	42mm-10	BPW	420mmv	0509705260/1
WT2040	RH		548					0509705250/1
WT2041	LH	419	56	1-1/2"	1-1/2-10	Meritor	12-1/4"	
WT2042	RH		56					
WT2043	LH	619	41.5	1-1/2"	1-1 /2 -10	Dana-Spicer	16-1/2"	M16WK111-12
WT2044	RH		57					M16WK110-12
WT2045	LH	280		1-1/2"	1-1/2-28	Hendrickson	16-1/2"	S-24636-1L
WT2046	RH							S-24636-1R
WT2071	LH	440	46	1-5/8"	1-1/2-28	Meritor	16-1/2"	2210M4329
WT2072	RH		46					2210L4328
WT2073	LH	356	44.5	1-1/2"	1-1/2-28	Meritor	16-1/2"	-
WT2074	RH		44.5					-
WT2075	LH	627	70	1-1/2"	1-1 /2 -10	Dana-Spicer	12-1/4"	-
WT2076	RH		70					-
WT2077	LH	229	44.5	1-1/2"	1-1/2-28	Meritor	16-1/2"	98-1210L
WT2078	RH		44.5					98-1210R
WT2081	LH	622	57	1-1/2"	1-1/2-10	Meritor	16-1/2"	504732-17L
WT2082	RH		57					504723-17R
WT2083	LH	357	44.5	1-1/2"	1-1/2-28	Meritor	16-1/2"	2210J7628
WT2084	RH		44.5					2210H7626
WT2085	LH	606	54	1-5/8"	1-1/2-37	Fruehauf	16-1/2"	AXA0420-6
WT2086	RH		54					AXA0420-5
WT2095	LH	278	46	1-1/2"	1-1/2-28	Meritor	16-1/2"	2210T5324S
WT2096	RH		46					2210S5323S
WT2300	LH	196	46	1 -1/2"	1-1/2-28	Meritor	16-1/2"	2210L7396
WT2301	RH		46					2210K7395
WT2302	LH	216	46	1-1/2"	1-1/2-28	Meritor	16-1/2"	2210F5440
WT2303	RH		46					2210E5439

VIEW FROM HEAD END

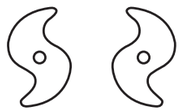

CAM LENGTHS ("A" DIM.) ARE MEASURED FROM UNDER CAM HEAD TO BEGINNING OF CIRCLIP GROOVE

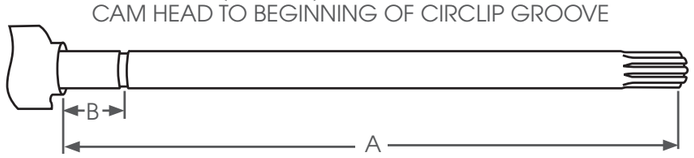

Watts	POS	A Size - MM	B size - MM	Journal DIA	Spline	Manufacturer	Drum dia	OEM #
WT2304	LH	230	48	1-1/2"	1-1/2-10	Meritor	16-1/2"	2210G5545
WT2305	RH		48					2210H5546
WT2306	LH	238	44.5	1-1/2"	1-1/2-28	Meritor	16-1/2"	2210Q7453
WT2307	RH		44.5					2210P7452
WT2308	LH	250	44.5	1-1/2"	1-1/2-28	Meritor	16-1/2"	2210L7474
WT2309	RH		44.5					2210K7473
WT2310	LH	265		1-1/2"	1-1/2-28	Meritor	16-1/2"	2210E7493
WT2311	RH							2210D7492
WT2312	LH	278	46	1-1/2"	1-1/2-28	Meritor	16-1/2"	2210A7512
WT2313	RH		46					2210Z7514
WT2314	LH	304	44.5	1-1/2"	1-1/2-28	Meritor	16-1/2"	2210L7552
WT2315	RH		44.5					2210K7551
WT2316	LH	364	40	1-1/2"	1-1/2-10	Eaton	16-1/2"	807862
WT2317	RH		40					807863
WT2318	LH	370	44.5	1-1/2"	1-1/2-28	Meritor	16-1/2"	2210A7645
WT2319	RH		44.5					2210Z7644
WT2322	LH	381	44.5	1-1/2"	1-1/2-28	Meritor	16-1/2"	2210Q7661
WT2323	RH		44.5					2210P7660
WT2324	LH	387	44.5	1-1/2"	1-1/2-28	Meritor	16-1/2	2210A7671
WT2325	RH		44.5					2210Z7670
WT2326	LH	402	44.5	1-1/2"	1-1/2-28	Meritor	16-1/2"	2210W7693
WT2327	RH		44.5					2210V7692
WT2330	LH	518	56	1-1/2"	1-1/2-28	Dana-Spicer	12-1/4"	BRB7008L
WT2331	RH		56					BRB7008R
WT2332	LH	525	55	1-1/2"	1-1/2-10	York	335mm	79790238/01L
WT2333	RH		55					79790238/01R
WT2334	LH	518	50	1-5/8"	1-1/2-28	Meritor	16-1/2"	2210G6871
WT2335	RH		50					2210F6870
WT2336	LH	538	55	1-5/8"	1-5/8-37	Fruehauf	12-1/4"	ACD2193-6
WT2337	RH		55					ACD2193-5
WT2338	LH	546	67.5	1-1/2"	1-1 /2 -10	Dana-Spicer	12-1/4"	M12WK101-1
WT2339	RH		67.5					M12WK100-1
WT2340	LH	581	56.5	1-1/2'	1-1/2-10	Meritor/ Dana	16-1/2"	2210A6345
WT2341	RH		56.5					2210Z6344

VIEW FROM HEAD END

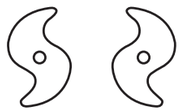

CAM LENGTHS ("A" DIM.) ARE MEASURED FROM UNDER CAM HEAD TO BEGINNING OF CIRCLIP GROOVE

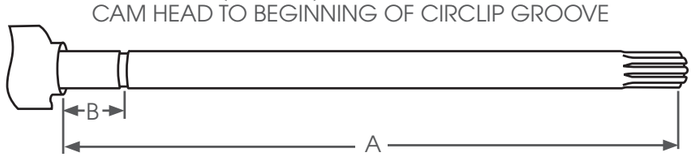

Watts	POS	A Size - MM	B size - MM	Journal DIA	Spline	Manufacturer	Drum dia	OEM #
WT2342	LH	598	44.5	1-5/8"	1-1/2-28	Dana-Spicer	16-1/2"	M16WKL25-236
WT2343	RH		44.5					M16WKR25-236
WT2344	LH	600	50	45.7mm	38mm-10	SAF	420mm	2262120100
WT2345	RH	OAL : 665	50					2262120200
WT2346	LH	605	67	43mm	1-1/2-10	ROR, BMX	350mm	21219322
WT2347	RH		67					21219321
WT2348	LH	607	50	45.7mm	38mm-10	SAF	420mm	2262110902
WT2349	RH	OAL : 669	50					2262110802
WT2350	LH	616		1-1/2"	1-1/2-10	York	335mm	79790238/19L
WT2351	RH							79790238/19R
WT2352	LH	610	56.5	1-1/2"	1-1/2-10	Meritor	16-1/2"	2210D6400
WT2353	RH		56.5			KIC, Sudisa		2210C6399
WT2356	LH	611	43	1-5/8"	1-1/2-10	Meritor	16-1/2"	R607068
WT2357	RH		43			KIC, Sudisa		R607067
WT2358	LH	611	50	1-5/8"	1-1/2-28	Meritor	16-1/2"	2210E6869
WT2359	RH		50					2210D6868
WT2360	LH	616	54	38mm	38mm-10	SAF	420mm	2262026902
WT2361	RH	668, OAL	54					2262027002
WT2362	LH	637	50	45.7mm	38	SAF	420mm	2262111202
WT2363	RH	OAL : 698	50					2262111402
WT2365	LH	731	616	42mm	42mm-10	BPW	420mm	0509705290
WT2366	RH							0509705300

CAMSHAFT COMPONENTS

CAMSHAFT TUBES	110
CAMSHAFT COMPONENTS	111-116
CAMSHAFT REPAIR KITS	117-119

watts

Camshaft Tubes

The Watts quality cam-tubes meet the OEM specifications and quality controls required by many axle manufacturers worldwide. These highly machined cam-tubes meet the industry requirements for extended service life and accurate fitment to the spider housing and camshaft retainers & seals to protect the camshaft.

Camshaft Kits

Also our camshaft repair kits are high quality components right down to the camshaft bushes, seals, spacer washers & circlip kits.

CAMSHAFT TUBES

A GP AXLES

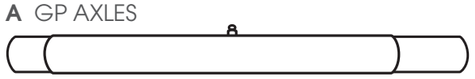

B MERITOR ARN/ATN/4000/6000

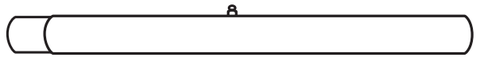

C FRUEHAUF-PROPAR

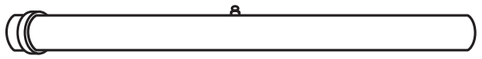

D YORK

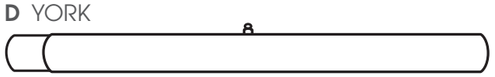

E BPW

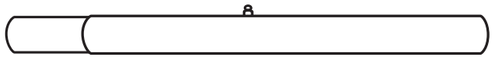

F HENDRICKSON

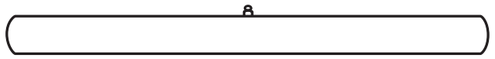

Type	Part #	Total Length	Centre OD	End OD	End ID
A	**WT2055**	450mm	48.5mm	47.5mm	38mm
Application: Suits most GP axles with short camshafts - Use with WT2003 & WT2004 camshafts					
A	**WT2055L**	526mm	48.5mm	47.5mm	38mm
Application: Suits most GP axles with long camshafts - Use with WT2003F & WT2004F camshafts					
B	**WT2056**	445mm	48.5mm	47.5mm	42 x 38mm
Application: Meritor/Rockwell ARN/ATN & 4000/6000 axles - Use with WT2011 & WT2012					
C	**WT2054 /457**	457mm	48.5mm	51mm	42mm
Application: Fruehauf-Propar axles - Use with WT2001 & WT2002 standard camshafts					
C	**WT2053**	520mm	48.5mm	51 mm	42mm
Application: Fruehauf-Propar axles - Use with WT2085 & WT2086 long camshafts					
D	**WT2059**	554mm	48.5mm	47.5mm	38mm
Application: York axles - Use with WT2081 & WT2082 camshafts					
D	**WT2057**	543mm	48.5mm	47.5mm	38mm
Application: York axles - Use with WT2332 & WT2333 camshafts					
E	**WT2051**	445mm	48.5mm	46mm	42mm
Application: BPW Old Generation axles - Use with WT2015 & WT2016 camshafts					
E	**WT2050**	510mm	48.5mm	46mm	42mm
Application: BPW New Generation axles - Use with WT2023 & WT2024 camshafts					
E	**WT2050L**	535mm	48.5mm	46mm	42mm
Application: BPW New Generation axles - Use with WT2039 & WT2040 camshafts					
F	**WT2047HD**	212mm	54mm	54mm	36.50mm
Application: Hendrickson Intraax & HSX axles, OEM: 98933-014 - Use with WT2045 & WT2046 camshafts					

CAMSHAFT COMPONENTS

Part No	Description	Application	
WT2055	Camshaft Bush I.D. 38mm Lth: 63mm	Freighter MK5 axle Ruby Owen, Fruehauf & ROR	
WT2102	Camshaft Bush I.D. 41mm Lth: 63mm	Fruehauf AXA, Propar axle	
WT2103	Camshaft Bush I.D. 41mm O.D. 62mm Lth: 44mm	Fruehauf ACD 2285	
WT2104	Camshaft Bush I.D. 38mm O.D. 48mm Lth: 51mm	STD Forge 405109	
WT2107	Camshaft Bush I.D. 38mm O.D. 62mm Lth: 44mm	STD Forge 405999-405128	
WT2201	Camshaft Bush I.D. 38mm O.D. 48mm Lth: 22mm	Freighter MK5, Fruehauf round McGrath D420 & Ruby Owen 6722	

Part No	Description	Application	
WT2202	Camshaft Bush I.D. 38mm O.D. 48mm Lth: 22mm	Frieighter MK5, Fruehauf round McGrath V438 & Ruby Owen 6723	
WT2203	Camshaft Bush I.D. 41mm O.D. 50mm Lth: 22mm	Fruehauf AXA-0419-900, Propar	
WT2209	Camshaft Bush I.D. 38mm O.D. 48mm Lth: 30mm	Rockwell 1725-W-23 Rockwell 1225-N-378 Eaton 68439, Eaton 51547 Eaton B-1581, Eaton B-2021 Frieghter 154-00854	
WT2209B Bronze Bush Version WT2209	Camshaft Bush I.D. 38mm O.D. 48mm Lth: 30mm	Rockwell 1725-W-23 Rockwell 1225-N-378 Eaton 68439, Eaton 51547 Eaton B-1581, Eaton B-2021 Frieghter 154-00854	
WT2210 Metal	Camshaft Bush I.D. 60mm O.D. 42mm Lth: 38mm	BPW 03.229.02.09.0 Transpec 019005217	
WT2210P Plastic	Camshaft Bush I.D. 60mm O.D. 42mm Lth: 38mm	BPW 03.229.02.09.0 Transpec 019005217 New style	

Part No	Description	Application	
WT2264	Camshaft Bush I.D. 38mm O.D. 48/50mm Lth: 38mm	Suit Mack spline end	
WT2265	Camshaft Bush I.D. 38mm O.D. 48/50mm Lth: 45mm	Suit Rockwell DR-SA	
WT3001	Camshaft Bush I.D. 68mm Stud Hole: 19mm	Fruehauf AXA 0430-1 Propar axle Suits WT2102 cam bush	
WT3005SQ	Cam Bush & Bracket	Rockwell 1225-P-640 Frieghter 154-00835 Replaces WT3005	
WT3100 Use WT3109	Circlip	Fruehauf AXA 0418-1 Freighter, Rockwell 1229-A-1119 Use on 1 5/8" camshafts	
WT3101 Use WT3108	D Washer I.D. 38mm	Fruehauf 219158 Freighter, Rockwell 1229-G-1463 Rubery Owen 6593 Use on 1 1/2" camshafts	

Part No	Description	Application	
WT3102 Use WT3108	Cam Spacer Washer I.D. 40mm O.D. 57mm TH: 1.58mm	Fruehauf AXA 0432-1 + 219293 Freighter, Rockwell 1229-R-122 Ruby Owen 6624 Use on 1 1/2" camshafts	
WT3103	Cam Spacer Washer I.D. 40mm O.D. 57mm TH: 0.80mm	Fruehauf 219292 Freighter, Rockwell 1229-Q-771 Ruby Owen 6627 Use on 1 1/2" camshafts	
WT3104	Cam Spacer Washer I.D. 40mm O.D. 62mm TH: 3.17mm	Standard Forge VB 5015 Use on 1 1/2" camshafts	
WT3105	Cam Spacer Washer I.D. 40mm O.D. 57mm TH: 2.38mm	Standard Forge 403149 Use on 1 1/2" camshafts	
WT3017 Use WT3108	Circlip	Fruehauf 219160 Rockwell 1229-Z-1118 Ruby Owen 0006 Use on 1 1/2" camshafts	
WT3108	Camshaft Washer Kit Contents: 1 X WT3101 2 X WT3102 3 X WT3107	Fruehauf I beam, round axles Freight MK5, Ruby Owen	

Part No	Description	Application	
WT3109	Camshaft Washer Kit Contents: 1 X WT3100 1 X WT3102 1 X WT3107 3 X WT3106	Fruehauf Propar axles	
WT3110	Camshaft Washer Kit Contents: 2 X WT3107 5 X WT3112	Rockwell RN & TN axles	
WT3111	Camshaft Washer Kit Contents: 1 X WT3100 1 X WT3102 2 X WT3117 1 X WT3203 1 X WT3205	Rockwell ARN, ATN & TL axles	
WT3112 USE WT3110	Camshaft Washer I.D. 38mm O.D. 50.8mm TH: 1.58mm	Feighter, Rockwell 1229-J-868 Standard Forge 403107	
WT3113	Camshaft Seal I.D. 38mm O.D. 45mm	Freighter 154-00815 Rockwell 1205-N-924 Use on RN axles	
WT3118	Camshaft Seal I.D. 41mm O.D. 50.8mm TH: 4.8mm	Freighter 154-00890 Rockwell 1205-U-1451 Use on ARN, ATN & RL axles	

CAMSHAFT COMPONENTS

Part No	Description	Application	
WT3120	Camshaft Inner Bush I.D. 41mm O.D. 48mm L.G. 29mm	Freighter 154-00896 Rockwell 1225-B-834 Use on ARN, ATN & RL axles	
WT3121	Camshaft Seal I.D. 41mm O.D. 48mm TH: 3.2mm	Freighter 154-00896 Rockwell 1205-V-1452 Use on ARN, ATN & RL axles	
WT3122	Camshaft Seal I.D. 38mm O.D. 48mm TH: 4.8mm	Freighter 154-00826 Rockwell 1205-M-1105 Use on Rockwell TN axles Standard Forge axles	
WT3132	Camshaft Washer Kit Contents: 2 X WT3012 2 X WT3124 1 X WT3125 1 X WT3126 1 X WT3127 1 X WT3128 1 X WT3129	BPW 09.801.00.14.1	

CAMSHAFT REPAIR KITS

Each kit contains sufficient washers, circlips, seals and bushes for one complete axle.

WT9004 Rockwell 'P' Series Drive Axle

Contents:
4 Only WT2206 Bushes
2 Only WT3101 D' Washers
2 Only WT3102 Washers
2 Only WT3103 Washers
2 Only WT3107 Circlips
4 Only WT3123 Neoprene Seals

WT9005 Rockwell T.K.L., T.L., T.K.D., Fruehauf No. 5, McGrath, Rubery Owen, Freighter MK5, Axles

Contents:
2 Only WT2101 Bushes
2 Only WT2201 Bushes (white)
2 Only WT2202 Bushes (yellow)
2 Only WT3101 D' Washers
6 Only WT3102 Washers
4 Only WT3107 Circlips

WT9006 Fruehauf Pro-par Axles

Contents:
2 Only WT2102 Bushes
4 Only WT2203 Bushes
6 Only WT3106 Washers
2 Only WT3102 Washers
2 Only WT3100 Circlips
2 Only WT3107 Circlips

WT9006R Round Bush Kit

Contents:
2 Only WT2103 Bushes
4 Only WT2203 Bushes
6 Only WT3106 Washers
2 Only WT3102 Washers
2 Only WT3100 Circlips
2 Only WT3107 Circlips

CAMSHAFT REPAIR KITS

Each kit contains sufficient washers, circlips, seals and bushes for one complete axle.

WT9008 Rockwell A.R.N., A.T.N., and R.L. (Freighter) Axles

Contents:
2 Only WT3006 Bushes
2 Only WT3121 Seals
2 Only WT3120 Inner Bushings
2 Only WT3119 Outer Bushings
2 Only WT3118 Seals
2 Only WT3102 Washers
4 Only WT3117 Washers
2 Only WT3203 Washers
2 Only WT3100 Circlips
2 Only WT3205 Circlips
4 Only WT3007 0' Rings

WT9012 Brake 95, BPW Axles

Contents:
2 Only WT3205 Circlips
4 Only WT3007 0' Rings
2 Only WT2210 Bushes
2 Only WT2108 Bushes
2 Only WT3130 Covers
2 Only WT3131 Clamps
4 Only WT3012 0' Rings
4 Only WT3124 Circlips
2 Only WT3125 Washers
2 Only WT3126 Seals
2 Only WT3127 Pressure Washers
4 Only WT3128 Stepped Washers
4 Only WT3129 Camshaft Lock Nut

WT9012N New Generation BPW Axles

Contents:
2 Only WT2111 Cambush
2 Only WT2210P Cambush
2 Only WT3015 Cambush Bracket Inner
2 Only WT3016 Cambush Bracket Outer
4 Only WT3130 Camshaft Cover
2 Only Camshaft Covers (Not Sold Separately)
6 Only WT3131 Camshaft Clamp
2 Only WT3129 Camshaft Locknut
2 Only WT3126 Camshaft Seal
4 Only WT3124 Circlip
2 Only WT3140 'O' Rings Green
2 Only WT3142 Camshaft Snap Ring
2 Only WT3141 Camshaft Disk
2 Only Camshaft Washers (Not Sold Separately)
4 Only 450 Grease Nipples
2 Only Straight Grease Nipples
12 Only Anchor Bkt Retaining Bolts, Nuts & Washers

WT9013 ROR Stepped Camshaft Repair Kit

Contents:
1 Only Spherical Bearing Assembly
1 Only Washer
1 Only Spacing Washer
2 Only 'O' Ring Inner
1 Only Thrush Washer
1 Only Bevel Washer
1 Only Cam Bush (Phosphor Bronze)
1 Only Camshaft Washer
1 Only Circlip
1 Only Circlip 30mm Dia. External

WT9017 Mack Drive Axle Repair Kit

Contents:
1 Only WT3101 'D' Washer
1 Only WT3103 Spacer Washer
1 Only WT3102 Spacer Washer
1 Only WT3107 Circlip
1 Only GT2265 Cam Bush Steel
1 Only GT2264 Cam Bush

WT9018 Meritor ROR, RN Series Axles ?????

Contents:
1 Only WT3118 Camshaft Seal
1 Only WT3119 Cam Bush Outer
1 OnlyWT3120 Cam Bush Inner
1 Only WT3121 Camshaft Seal

WT9020 SAF J Series Axle, RZ12242/18C & RZ10242/18C

Contents = One Axle Set:
2 Only WT7182 Spacer Ring
2 Only WT7135 O Ring 38mm
2 Only WT7133 Camshaft Bronze Bush Assembly
2 Only Rubber Boot
2 Only WT9025 Camshaft Bush & Retainer

SLACK ADJUSTERS

MANUAL BRAKE SLACK ADJUSTER - 10 SPLINE	122-123
MANUAL BRAKE SLACK ADJUSTER - 28 SPLINE	124-125
MANUAL BRAKE SLACK ADJUSTER - 37 SPLINE	124-125
ABA - AUTO BRAKE ADJUSTER APPLICATION	124-125
WATTS AUTOMATIC BRAKE ADJUSTER INSTALLATION PROCEDURES	126-127

watts

SLACK ADJUSTERS – MANUAL & ABA

The Watts manual slack adjusters are made in two stages, first the casting of the body and the second is the worm drive. This worn drive is a precision made component only made be a few factories worldwide because of the technology.

This is where lesser quality brand slack adjusters fail in service which is a vital component when it comes down to safety and stopping the vehicle. Our slack adjusters have always been considered high quality and repairers throughout the industry request the Watts brand.

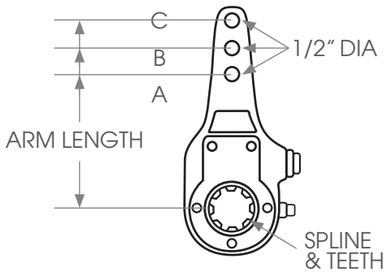

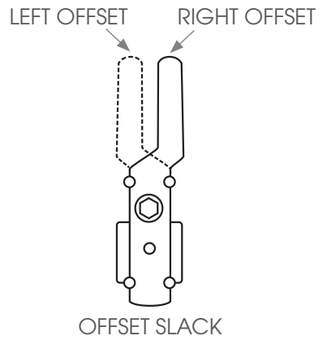

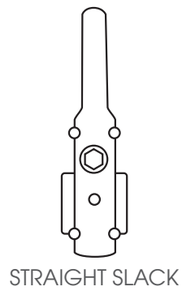

MANUAL BRAKE SLACK ADJUSTER - 10 SPLINE

	SPECIFICATION							APPLICATION	
Part No	Spline Dia	Pin Dia	Spline	A	B	C	D	O/S = OFFSET & STR = STRAIGHT	OEM No
WT5018LH WT5018RH	1 1/2"	1/2"	10	5"	6"	-	O/S	1 1/2" OFF SET ARM	
WT5019LH WT5019RH	1 1/4"	1/2"	10	4 1/2"	5 1/2"	-	O/S	Front Axle suit Mack 5/8" OFF SET ARM	KN49000/10
WT5020 WT5020HD	1 1/2"	1/2"	10	5"	6"	7"	STR	Trailer General Purpose - STD Heavy Duty Version - 19mm Nut	51012
WT5022	38.1mm	1/2"	10	120-150	180-220	250mm	STR	BPW Axle	0517452610
WT5023 WT5023HD	1 1/2"	1/2"	10	5.5"	6.5"	-	STR	Drive Axles - Straight arm, Standard Heavy Duty Version - 19mm Nut	-
WT5026LH WT5026RH	1 1/2"	1/2"	10	4"	5"	6"	O/S	Front & Drive Axles, 5/8" OFF SET	-
WT5027LH WT5027RH	1 1/2"	1/2"	10	4.5"	5.5"	-	O/S	5/8" OFF SET ARM	-
WT5028	1 1/2"	1/2"	10	6"	-	-	CA	DANA Lowloader - Curved arm	-
WT5057LH WT5057RH	1 1/2"	1/2"	10	5.5"	6.5"	-	O/S	1 1/2" OFF SET ARM	288540 288539
BP5059LH BP5059RH	1 1/2"	1/2"	10	6"	7"	-	O/S	5/8" OFF SET ARM	279947 279946
BP5060LH	1 1/2"	1/2"	10	7"	-	-	O/S	1 1/2" OFF SET ARM	279351
BP5060RH									279350

SLACK ADJUSTER APPLICATION

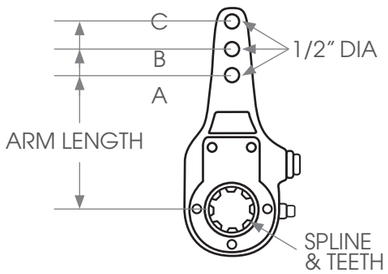

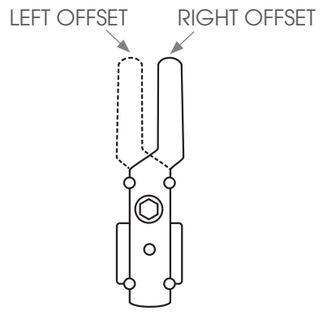

OFFSET SLACK

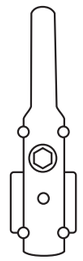

STRAIGHT SLACK

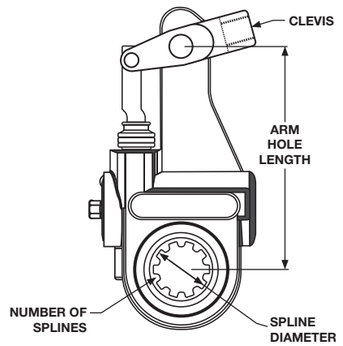

MANUAL BRAKE SLACK ADJUSTER - 28 SPLINE

	SPECIFICATION							APPLICATION	
Part No	Spline Dia	Pin Dia	Spline	A	B	C	D	O/S = OFFSET & STR = STRAIGHT	OEM No
WT5070LH WT5070RH	1 1/2"	1/2"	28	5.5"	-	-	O/S	5/8" OFF SET ARM	KN53030 KN53020
WT5024 WT5024HD	1 1/2"	1/2"	28	5.5"	6.5"	-	STR	Drive Axle - Straight arm, Standard Heavy Duty Version - 19mm Nut	
WT5025 WT5025HD	1 1/2"	1/2"	28	5"	6"	7"	STR	Trailer axle - Standard Heavy Duty Version - 19mm Nut	
BP5058LH BP5058RH	1 1/2"	1/2"	28	5.5"	6.5"	-	O/S	1 1/2" OFF SET ARM	287897 287896

MANUAL BRAKE SLACK ADJUSTER - 37 SPLINE

	SPECIFICATION							APPLICATION	
Part No	Spline Dia	Pin Dia	Spline	A	B	C	D	O/S = OFFSET & STR = STRAIGHT	OEM No
WT5021	1 5/8"	1/2"	37	6"	-	-	STR	Fruehauf Propar	
WT5021-3	1 5/8"	1/2"	37	5"	6"	7"		Fruehauf Propar	
WT5021-3HD	1 5/8"	1/2"	37	5"	6"	7"		Heavy Duty Version - 19mm Nut	

ABA - AUTO BRAKE ADJUSTER APPLICATION - WATTS - CREWSON-BRUNNER

	SPECIFICATION							APPLICATION	
Part No	Spline Dia	Pin Dia	Spline	A	B	C	D	O/S = OFFSET & STR = STRAIGHT	OEM No
WT5011AS	1-1/2"	1/2"	10	5"	6"	7"	STR	TRAILER AXLE	?
WT5012AS	1-1/2"	1/2"	10	5"	6"	-	STR	TRAILER AXLE	21103 / T02-5011
WT5013AS	1-1/2"	1/2"	28	5"	6"	-	STR	TRAILER AXLE	22103 / T02-5017
WT5014AS	1-1/2"	1/2"	28	5.5"	6.5"	-	STR	DRIVE AXLE	22102 / T02-5018
WT5015-3AS	1-1/2"	1/2"	37	5"	6"	-	STR	FRUEHAUF AXLE	KN52260 / T02-5012
WT5016AS	1-1/2"	1/2"	10	5.5"	6.5"	-	STR	DRIVE AXLE	21102 / T02-5016
WT5022AS	38.1mm	1/2"	10	120-150	180-220	250mm	STR	BPW - pairs only	05 574 82 43 2

WATTS AUTOMATIC BRAKE ADJUSTER INSTALLATION PROCEDURES

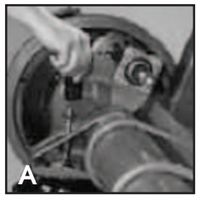

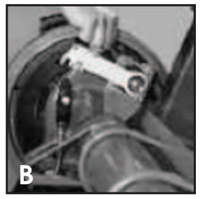

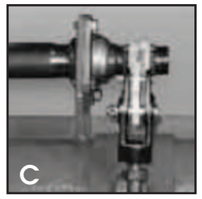

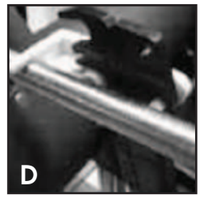

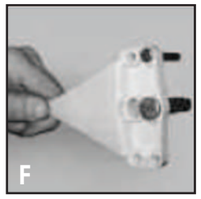

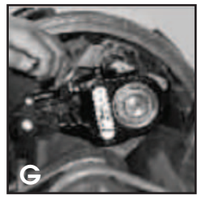

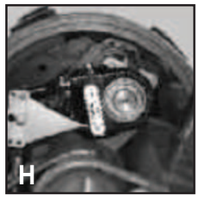

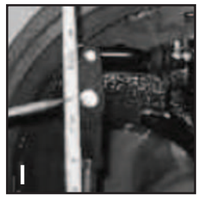

PRIOR TO INSTALLATION

A) Chock the vehicle wheels (Block all the wheels to prevent the vehicle from rolling and avoid injury)

B) Check all foundation brakes. Brake adjusters cannot compensate for problems with foundation brakes. Replace any worn cam bushing, pins, rollers and brake shoes, or broken return springs.

C) Fully Cage the spring brake by following the manufacturer's recommended procedures.

Caution: Some mechanical caging devices do not fully cage the spring brake. Watts recommends using air at 90 – 100 psi to fully cage the brake spring.

ABA INSTALLATION

1. Remove the existing brake adjuster and clevis. Keep the existing mounting hardware. Do not remove the clevis jam nut.
2. Thread the Watts ABA clevis on to the push rod and install the 1/2" clevis pin into the clevis. Do not tighten jam nut. (SEE PHOTO A.)

NOTE: Do not use the old clevis or a competitor's clevis. In order to guarantee proper set up, you must use the new Watts clevis and template provided in the kit.

3. Slide the installation template over the S-cam spline; swing the template into the clevis until the appropriate slot totally engages the 1/2" clevis pin. (SEE PHOTO B.)
4. Once the template has been swung into place, install the 1/4" clevis pin. If the 1/4" clevis pin does not slide freely into the clevis and template, remove the template from the clevis. Follow these instructions: (SEE PHOTO C.)

- If the 1/4" template hole sits below the 1/4" clevis hole, rotate the clevis CW until the holes align.
- If the 1/4" template hole sits above the 1/4" clevis hole, rotate the clevis CCW until the holes align.
- If the push rod threads extend through the clevis more than 1/16", remove clevis and cut rod to length.
- A minimum of 1/2" of push rod engagement in the clevis body is required. If this is not the case, install a new push rod and cut rod to length, or use a Watt extended clevis.
- When installing a new chamber or pushrod, use a pushrod tool to accurately cut the pushrod to the correct length. (SEE PHOTO D.)
- Remove template and both clevis pins.

INSTALL THE ABA ONTO THE S-CAM

1. Before installing the ABA, apply anti-seize on the S-cam spline. Install the ABA onto the camshaft using the original mounting hardware. Properly shim the ABA. Place other washers as needed on the end of the camshaft on the outside of the ABA. Re-attach the retaining clip. (SEE PHOTO E.)
2. Tighten jam nut to 50 ft-lbs torque minimum.
3. Use a 7/16" wrench, manually rotate the adjuster shaft CW until the ABA arm holes align with the clevis holes.
4. **If your adjuster is equipped with "Auto-Check"** stroke indicator, do the following:

A) Insert the 1/2" clevis pin into the yellow "Auto-Check" pointer hole. Be sure to use the correct set of holes in the pointer for the ABA you are installing. The clevis pin's head should face the front of "Auto-Check". (SEE PHOTO F.)

B) "Auto-Check" is non-handed and can be installed on either the right or left side of the ABA. "Auto-Check" is designed to face the center of the vehicle.

C) Now insert the 1/4" clevis pin with the "Auto-Check" pointer into the clevis and install your cotter pins.

5. If your adjuster is not equipped with "Auto-Check" simply install the pins.
6. Use a 7/16" wrench, manually rotate the adjuster CW until the brake linings contact the drum. Now back off 1/2 turn CCW to set the clearance. (SEE PHOTO G.)

WARNING: If you apply the brakes before this step, you will cause damage to the ABA.

7. Uncage the spring brake.
8. Build up the vehicle air pressure to 90-100 psi.
9. The "Auto-Check" pointer will now point to the "home" location on the housing. (SEE PHOTO H.)
   • If it does not point to the home position, remove the ABA and reinstall.
10. Measure the distance from the air chamber to the center of the 1/2" pin. Fully apply the brakes with 90-100 psi air pressure and re-measure the distance to the 1/2" pin. (SEE PHOTO I.)
11. Fully apply and release the brakes several times to check for adequate clearance to all the adjacent components.

    Maintenance: The ABA should be greased every 6 months or 60,000 kilometers using quality NLGI #2 Moly EP multipurpose grease as part of the regular equipment maintenance schedule.

WARNING

Excessive pushrod stroke or tight running brakes indicates that there is a problem with the foundation brake components, the ABA installation, or the ABA. The proper way of checking an ABA to see if it is working within specs is to measure the pushrod stroke. The only time the ABA should be manually adjusted is during installation or at reline. Constant manual adjustment of the ABA is a dangerous practice and may lead to reduced internal component life, or have other more serious consequences.

BRAKE CHAMBERS

BRAKE CHAMBERS	130
BRAKE CHAMBERS SCHEMATIC DRAWINGS	131-133

COMPLIANCE

BRAKE CHAMBERS

Watts Friction Plus is proud to introduce the new Watts quality brake chambers in various types for mechanical & disc brake applications. These brake boosters are high quality and comply with industry standards SAEJ1469. The Watts brake chambers represent value for money and are fully guaranteed.

FEATURES AND BENEFITS:

- Crimped and Permanently Sealed Housing for Safety
- Fully Threaded Push Rod
- Powder Coated Spring & Housing for Extended Service Life

NEW CRIMPED/ SEALED TYPE BRAKE CHAMBER

Part No	Description	Type	Ports	Push Rod Lth	Stroke
WT24	Single	24	3/8"NPT	200mm	
WT30	Single	30	3/8"NPT	210mm	
WT2020	Dual	20/20	3/8"NPT	205mm	64mm
WT2430	Dual	24/30	3/8"NPT	205mm	64mm
WT3030	Dual	30/30	3/8"NPT	205mm	64mm
WT2024	Disc Brake	20/24	16mm	15mm	
WT1824	Disc Brake	18/24	16mm	15mm	
WT1624	Disc Brake	16/24	16mm	15mm	
WT1616	Disc Brake	16/16	16mm	15mm	
WT1424	Disc Brake	14/24	16mm	15mm	
WT1416	Disc Brake	14/16	16mm	15mm	
WT1216	Disc Brake	12/16	16mm	15mm	

WT24

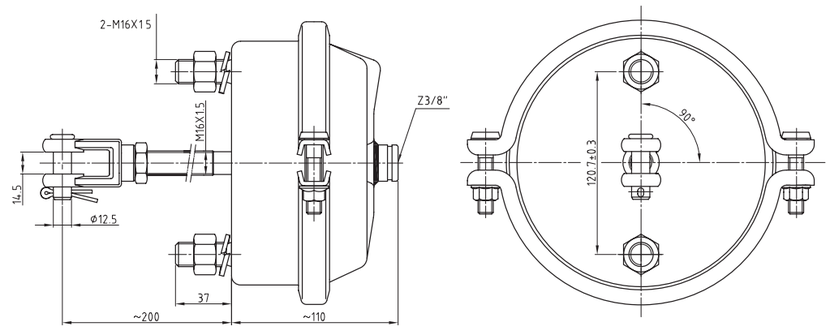

WT30

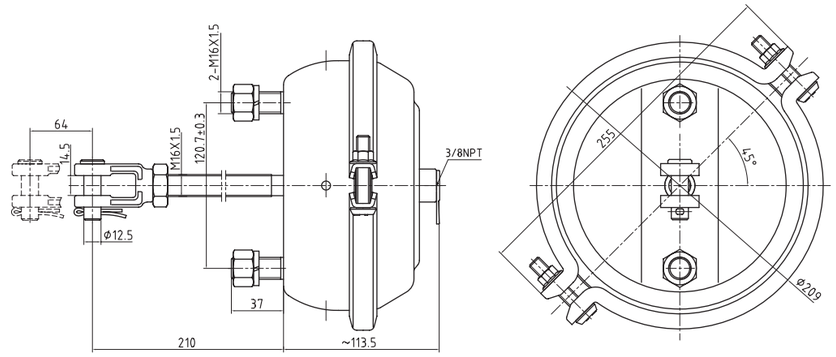

WT2020

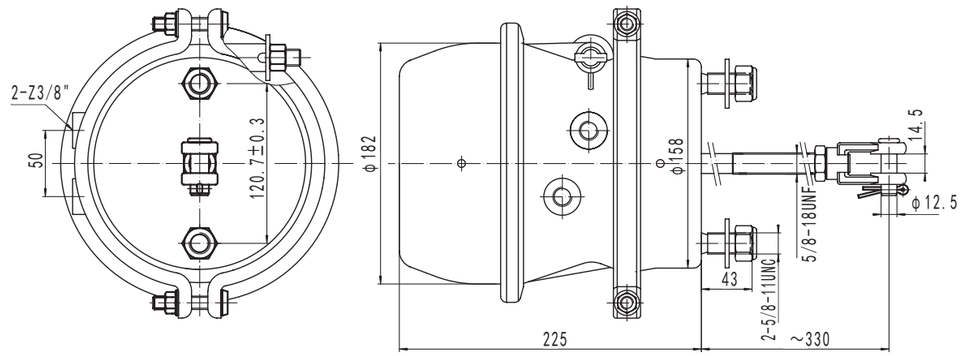

WT2430

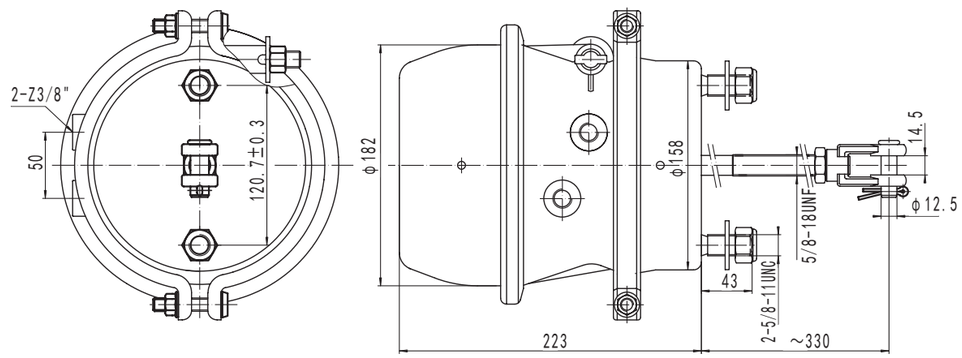

WT3030

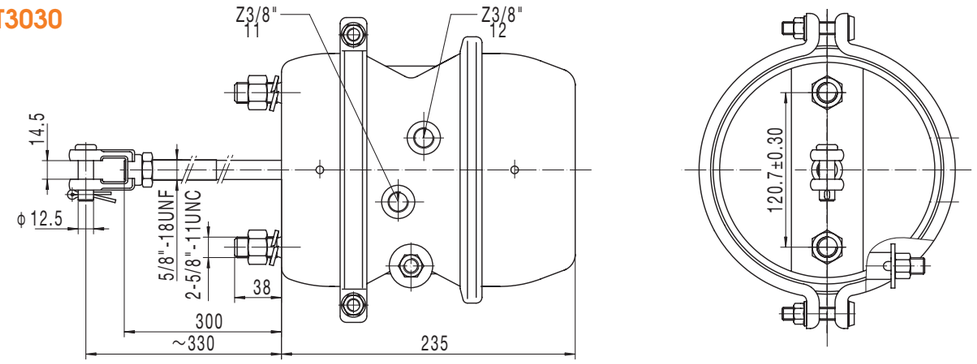

WT2024

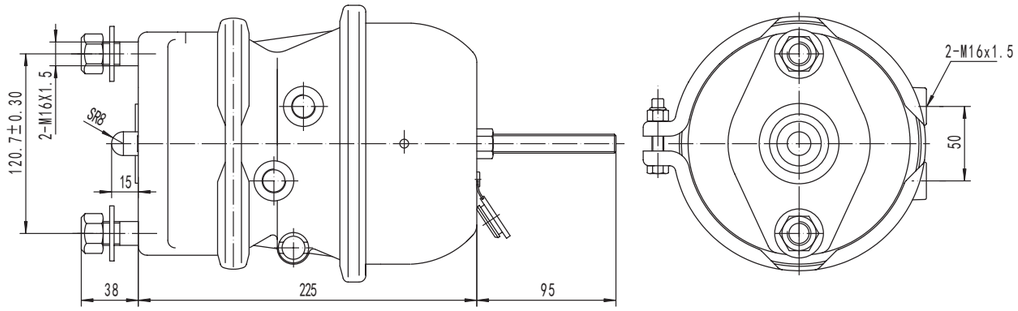

WT1824

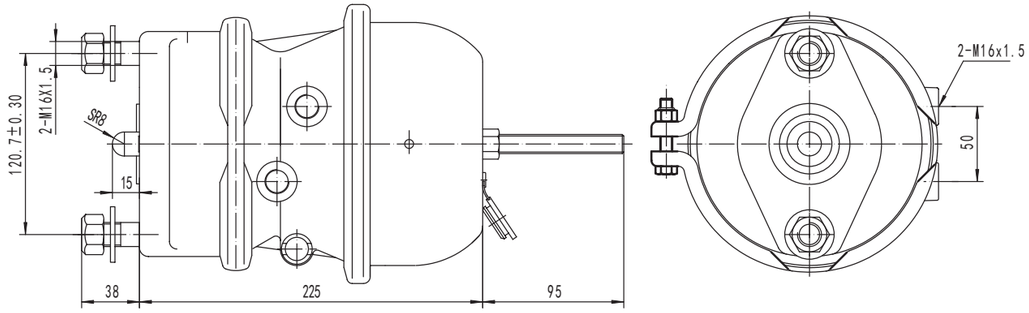

WT1624

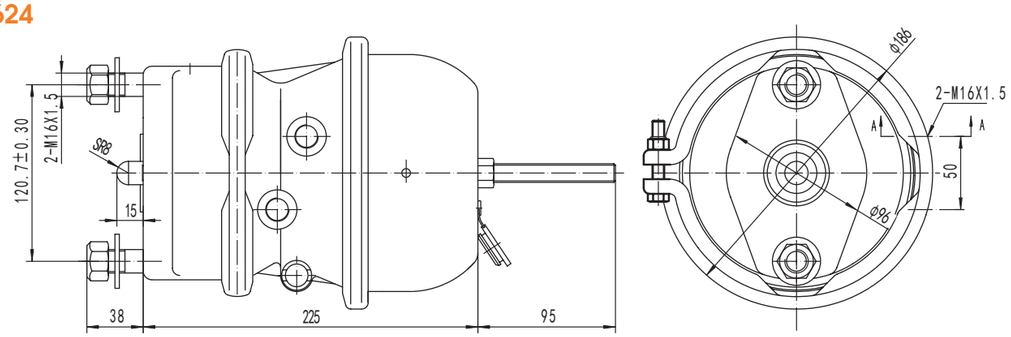

WT 1616

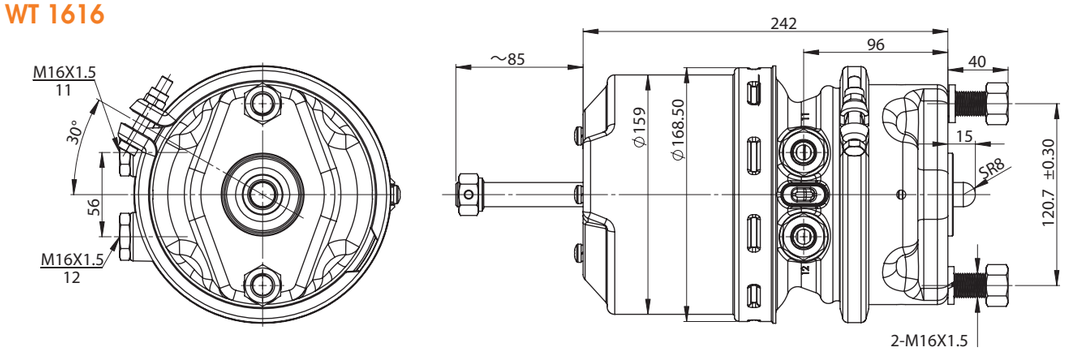

WT1424

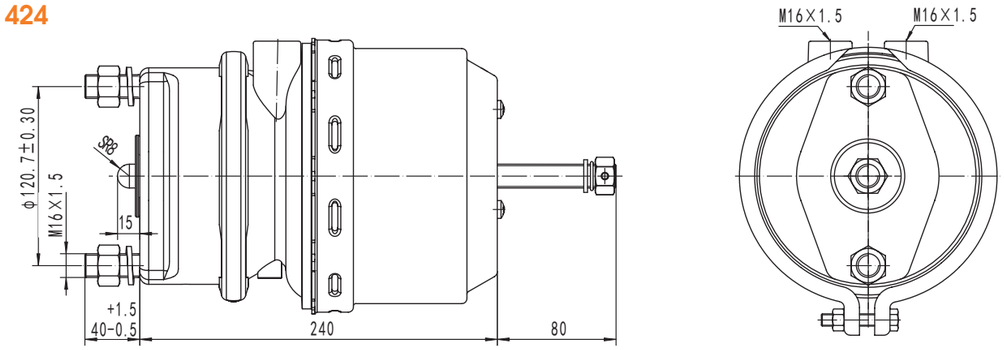

WT1416

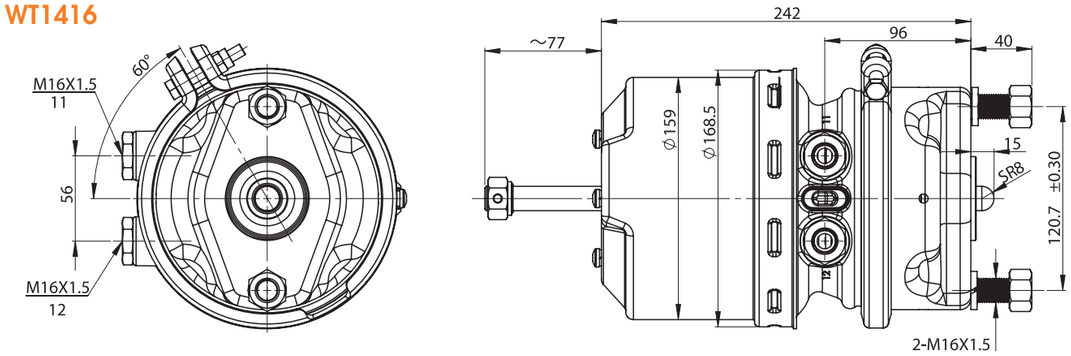

WT1216

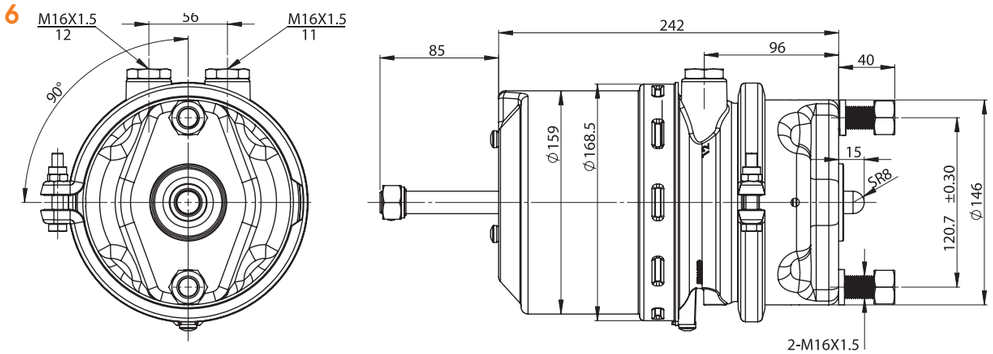

AIR SPRINGS

AIRSPRING APPLICATION LIST
BPW, HENDRICKSON, MERITOR, ROCKWELL - ROR, SAF, YORK 136-137

AIR SPRINGS - SCHEMATIC DRAWINGS 138-143

watts

blacktech
Air Springs

BLACKTECH AIR SUSPENSION SYSTEMS

Blacktech manufacture high quality air springs and certified under T16949:2002 which implements quality management systems to obtain this certification. Our production facility in Europe has the latest technology to produce high quality air spring products.

Features & Benefits:

- Provide equal suspension comfort under all kinds of environmental conditions including road surface and load constraints.
- Maintenance free operation.
- Ease loading and unloading by adjusting chassis height of the vehicle.
- Protect the vehicle and the fragile loads from vibrations while driving.
- Prevent the vehicle from leaning to one side in unbalanced loading conditions.
- Increase road holding of the vehicle for safety.

Blacktech Air Springs are put through a wide range of tests procedures to ensure that the air springs operate correctly and comply with required quality standards. Our goal is to be known as a company supplying high quality air spring products worldwide.

blacktech Air Springs

AXLE MANUFACTURER	MODEL	GENUINE OEM No	BLACKTECH	GOODYEAR	FIRESTONE	POWERDOWN	Other
BPW	TYPE 30 COMPLETE	05.429.43.36.0 05.429.40.04.0 05.429.40.09.0 05.429.40.34.0 05.429.43.20.0 05.429.43.66.0	RML7052CP	566-22-3-501 1R11-763	W01 M58 8668 IT17D8.3	3941-01KPP	
BPW	TYPE 30K COMPLETE	05.429.43.35.0 05.429.43.20.0 05.429.43.66.0 05.429.43.21.0 05.429.43.65.0	RML7051CP	566-22-3-501 1R11-752	W01 M58 8585 IT17D4.3	3940KPP	
BPW	TYPE 36 COMPLETE	05.429.43.60.0 05.429.40.39.0 05.429.40.14.1 05.429.40.47.1 05.429.40.50.1 05.429.40.61.1 05.429.43.51.0 05.429.43.69.0	RML7992CP	566-28-3-501 1R14-748	W01 M58 8667 IT66D10.8	3881-01KPP	
BPW	TYPE 30 BELLOWS	05.429.42.25.0 05.429.40.03.0 05.429.40.28.1 05.429.42.57.0	RML7052	566-22-3-500 1R11-700	W01 M58 8620 IT17D8.3	5941AP02	941MB 1DK21
BPW	TYPE 30K BELLOW	05.429.42.20.0 05.429.40.91.0 05.429.42.56.0	RML7051	566-22-3-501 1R11-703	W01 M58 8613 IT17D4.3	5940AP02	940MB 1DK21K
BPW	TYPE 36 BELLOW	05.429.42.26.0 05.429.40.01.0 05.429.40.03.6 05.429.42.58.0	RML7992	566-28-3-501 1R14-708	W01 M58 8978 IT66F10.8	5881AP02	881MB 1DK32
HENDRICKSON	HT230 Single Stud	C-20010	RML 78800 C	Now Use C-21208			
HENDRICKSON	HT230TA Dual Stud	C-21208	RML 78800 C	566-26-3-053 566-26-3-036 1R13-119	W01 358 9579 IT15 VM 4 IT15 VP 4 9270	66447	4150NP04
HENDRICKSON	HT250US	C-20127	RML 79580 C	566-26-3-039 566-26-3-068 1R13-118 1R13-081 1R13-144	W01 358 9580 IT17CL9.5 9262 9580	64394	
HENDRICKSON	AA250 Intraax	C-20901 C21784	RML 78091 CP	566-28-3-015 1R14-171	W01 358 8091 IT19FC6 8091	64421	38091KPP
HENDRICKSON	Maxitraax	S-21800 S20900	RML 78709 CP	566-26-3-073 1R13-159	W01 358 8709 IT17CA5 8709 8751	64645	38709KPP
HENDRICKSON	HAS SERIES	57122-001 57122-002	RML 79373 CP	566-24-1-019 566-24-3-097 1S12-019 1S12-030 1R12-403	W01 M58 9373 IT15MT8		
HENDRICKSON	HT300U	B2066 S11651 B12514-007	RML 75267 CP-14	1R12-092	W01-006-9082 W01-358-9082	64269	
MERITOR	CS9	21229214	RML 78608 CP		IT17DJ-7 W01-M58-8608		
ROCKWELL - ROR	9000 R.O.R. Flexair	2501202	RML 75268CP4 - Metric	566-22-3-521 1R11-111	W01M586297 IT15MP7	1DK20C-54 34157KPP	4157 N P04 1DK21A-8
ROCKWELL - ROR	RFS2000	295034A	RML 75268CP4-Metric	566-22-3-521 1R11-111	W01M586297 IT15MP7	1DK20C-54 34157KPP	4157 N P04 1DK21A-8
ROCKWELL - ROR	E520 Holland 2 Stud Type	2501202	RML 75268CP4-Metric	566-22-3-521 1R11-111	W01M586297 IT15MP7	1DK20C-54 34157KPP	4157 N P04 1DK21A-8
ROCKWELL - ROR	11000 SERIES	2501201	RML7921C	1R14-059	1T19F7		810MB
ROCKWELL - ROR	RFS2000 H/D	295228-1	RML7921C	1R14-059	1T19L7		810MB
SAF	SAF	3.229.0029.00 3.229.2129.00 3.229.2229.00 3.229.2429.00 2618V	RML 75133 CP3	1R11-714	IT15BS-6 W01 M586367	34022K	
SAF	SAF	3.228.1033.00 3.229.0033.00	RML 75133 CP5		IT17BS-6 W01 M588612		
YORK	TECAIR 1	785170 61.505859.01	RML 7924C	1R14-705	W01-M58-6364 IT19L-11	1D28C-26 3813K	813MB
YORK	TECAIR 2	785168 61.506243.01	RML 7921 C	1R14-059	W01-M58-6345 IT19L-7	1D28G-26 3810-25K	810MB
YORK	TECAIR FB	61.610121	RML 75267 CP-14		W01-006-9082 W01-358-9082	64269 1DK23K-9082	

RML7051CP BPW

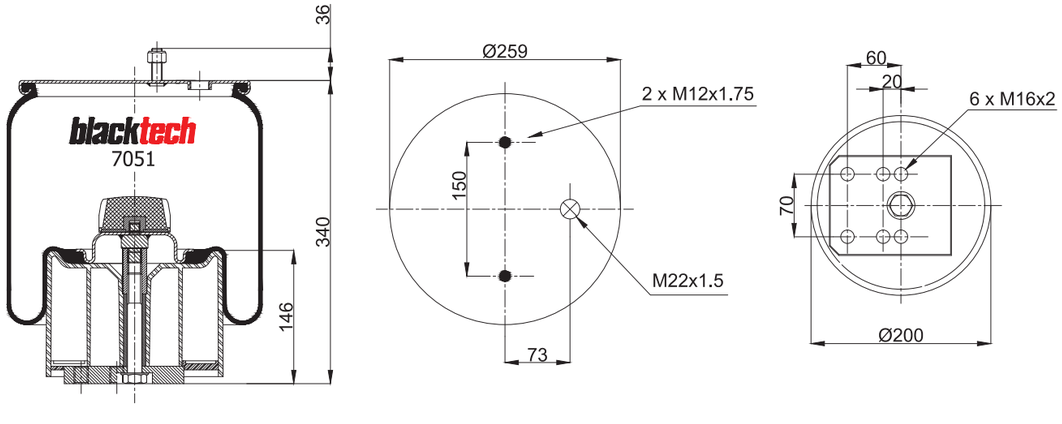

RML7051 BPW

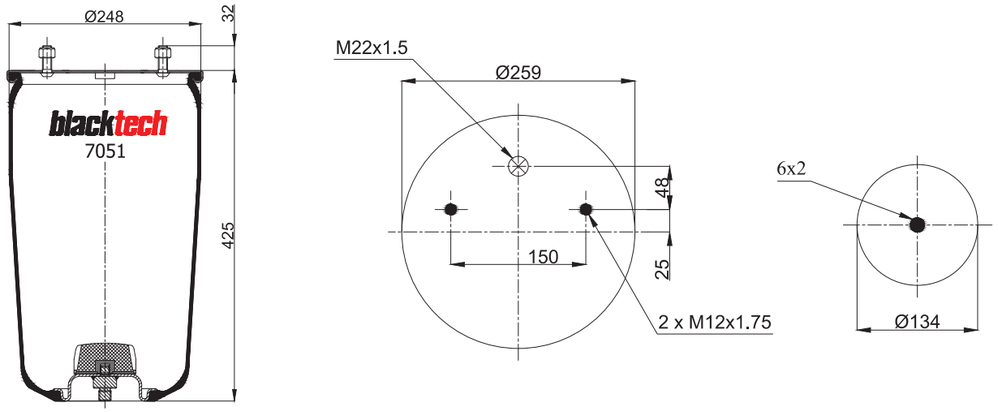

RML7052CP BPW

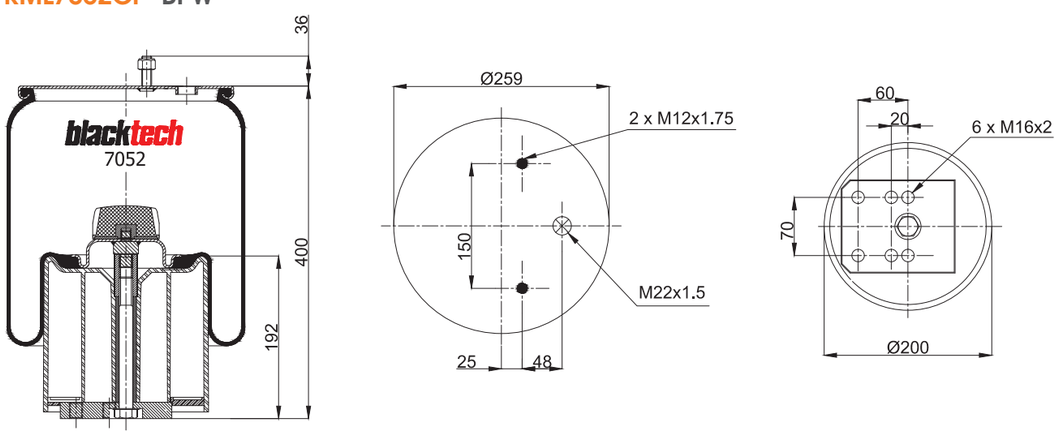

RML7052 BPW

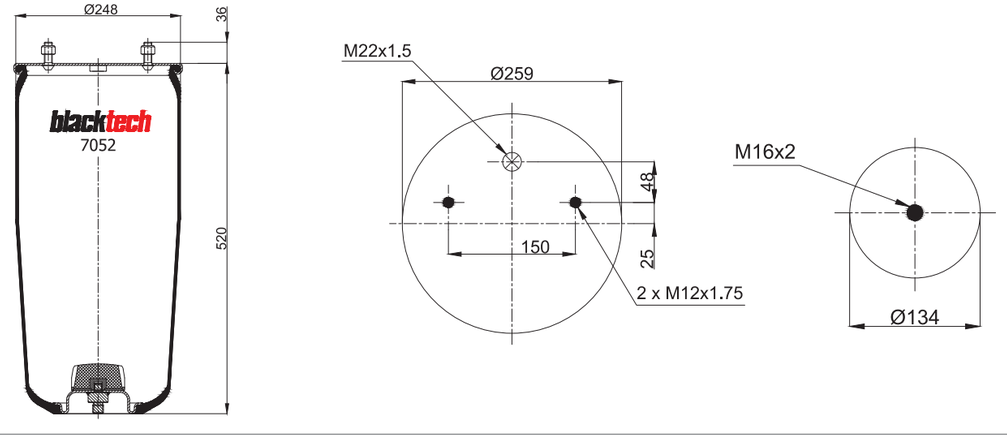

RML7921 ROCKWELL - ROR, YORK

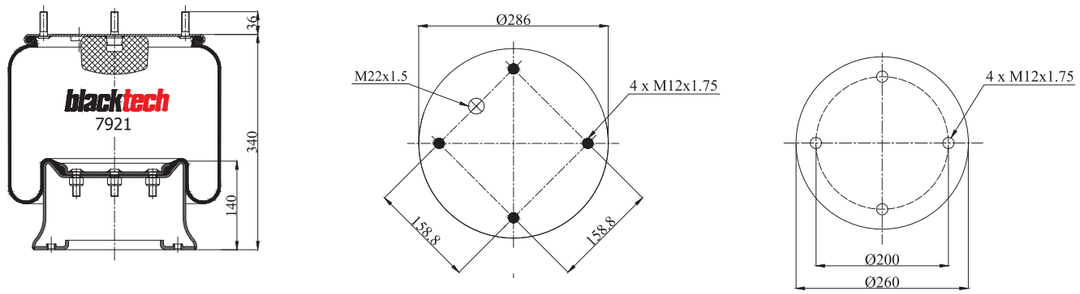

RML79242C YORK

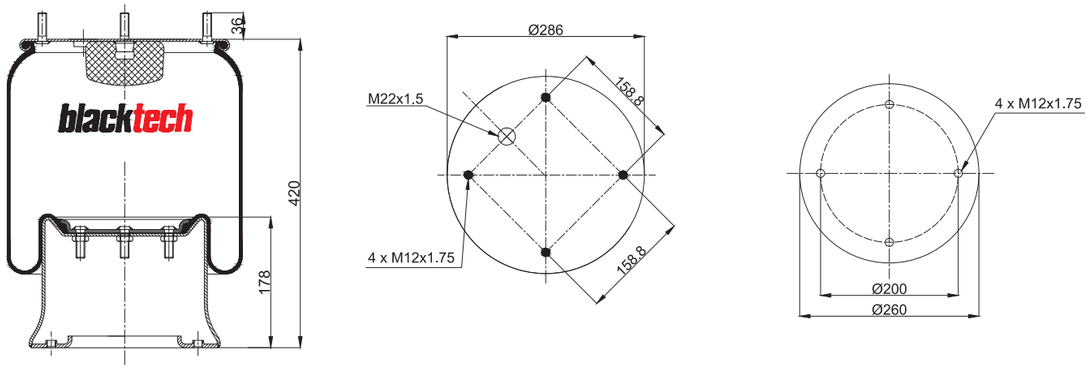

RML7992CP BPW

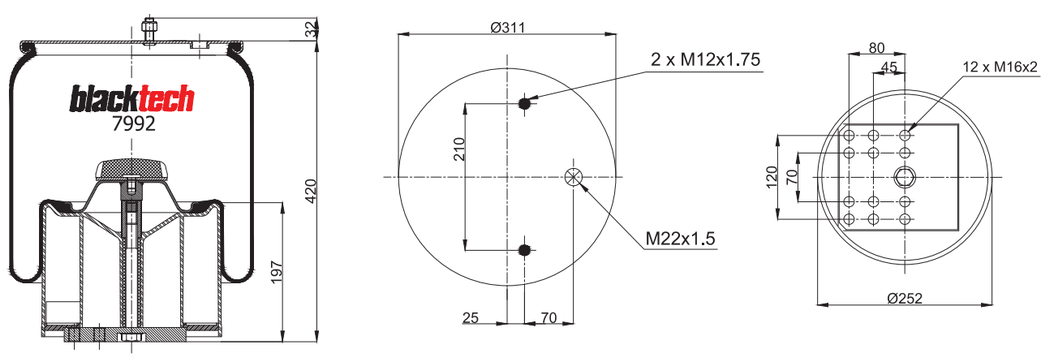

RML7992 BPW

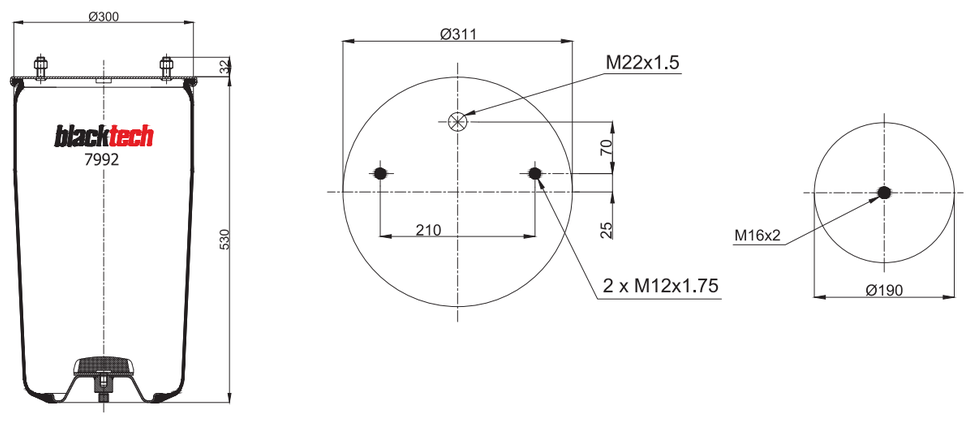

RML75133CP3 SAF

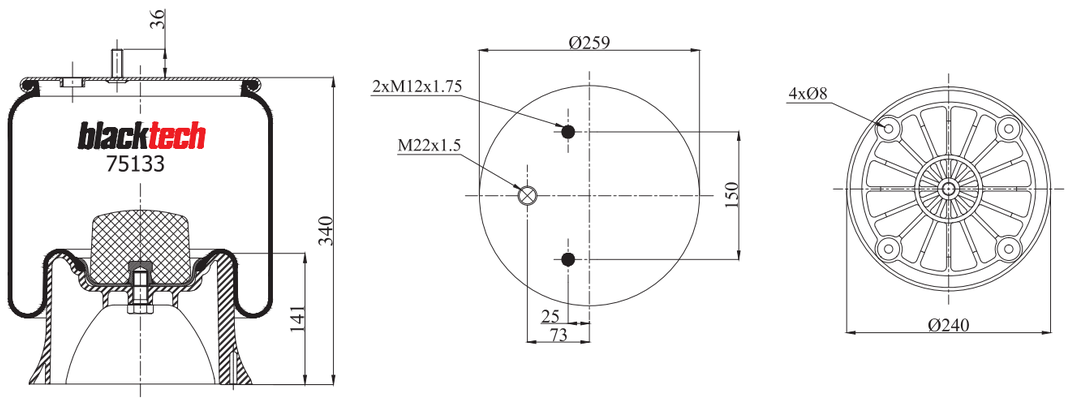

RML75133CP5 SAF

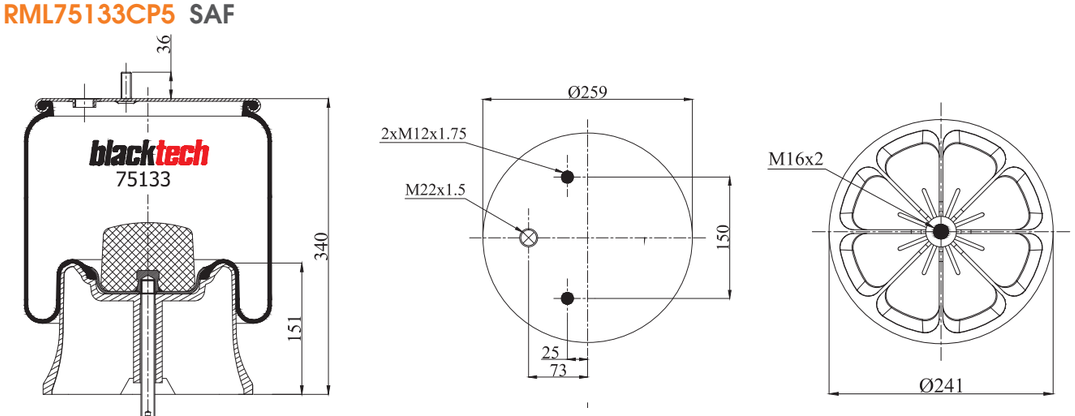

RML75267CP14 YORK

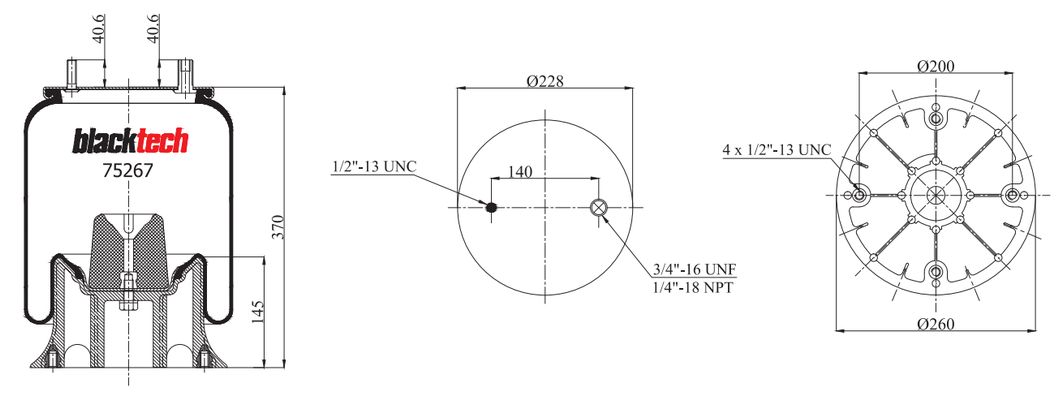

RML75268CP4 ROCKWELL - ROR

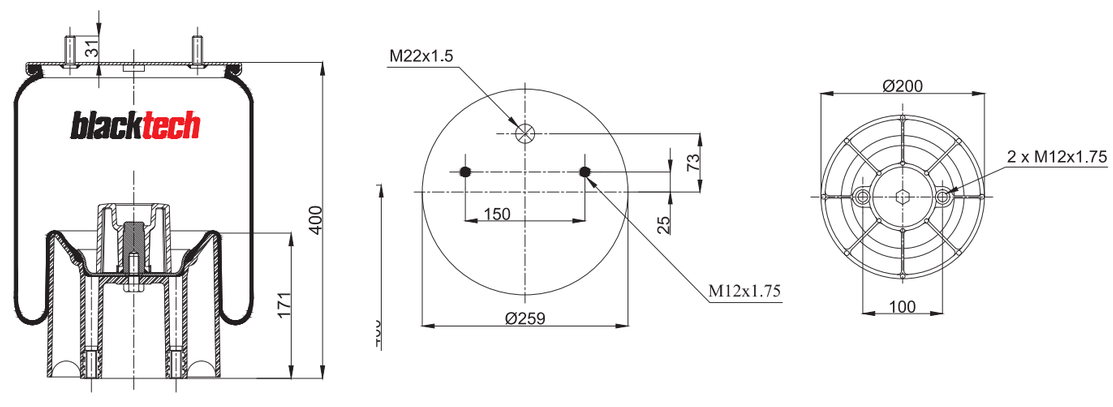

RML78091CP HENDRICKSON

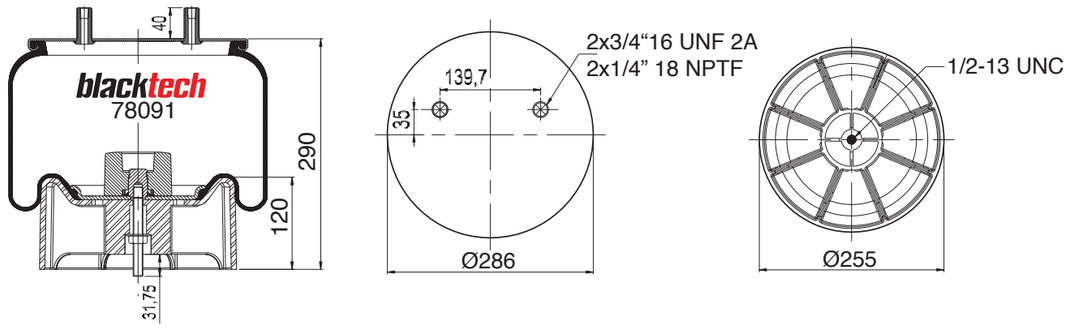

RML78608CP MERITOR

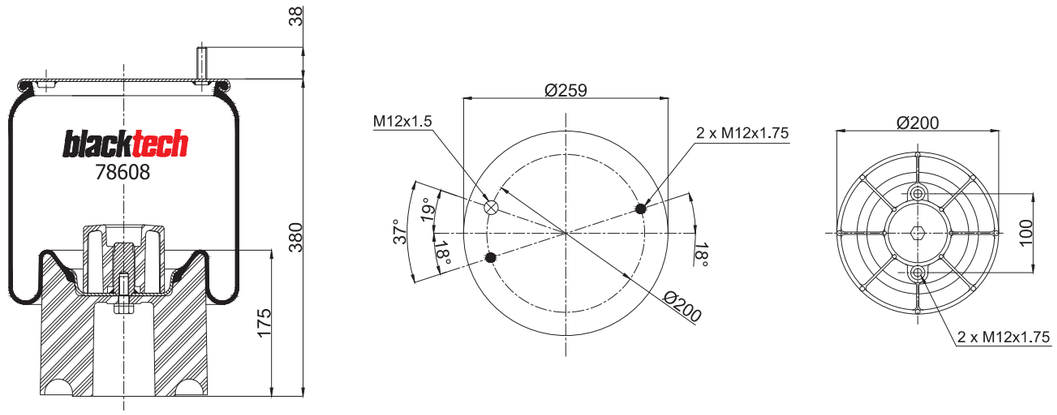

RML78709CP HENDRICKSON

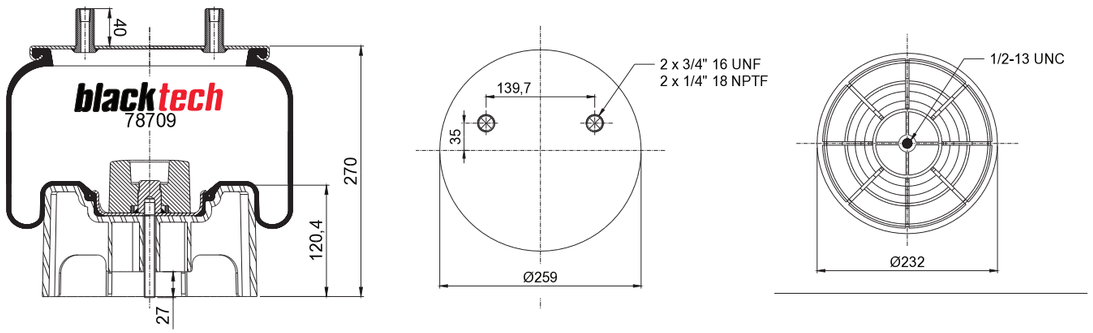

RML78800C HENDRICKSON

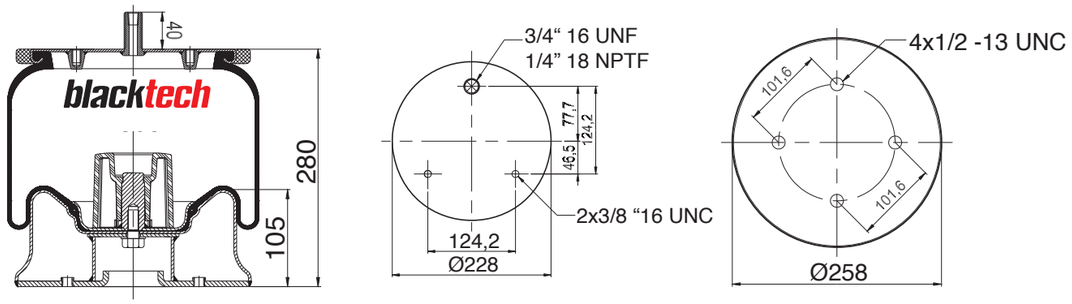

RML79373CP HENDRICKSON

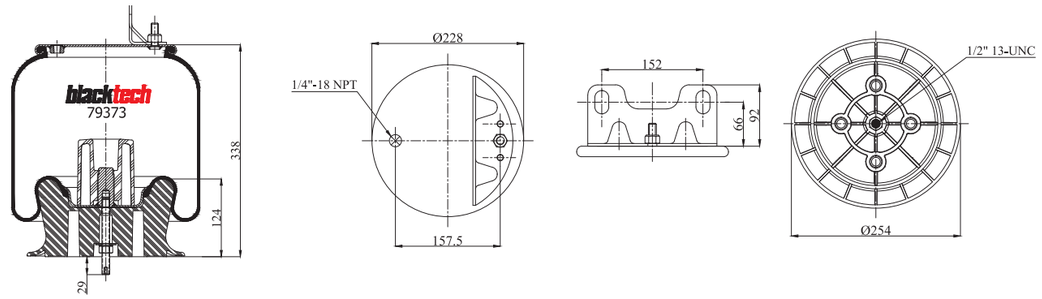

RML79580C HENDRICKSON

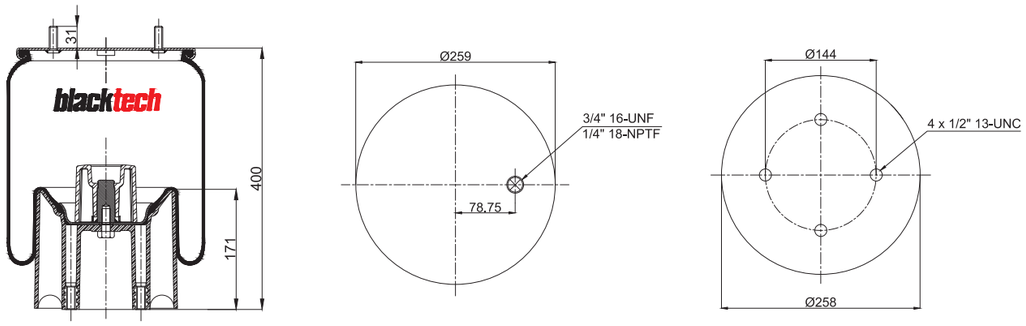

SHOCK ABSORBERS

watts

WATTS #	Description	OE Number	Powerdown
WT1810	BPW 326-496mm 24mm eye	237228300, 0237221400, 0237025200	P183, P53024
WT1811	KRUEGER, ROR	21224745	P342
WT1812	BPW 475-800mm 24mm eye	237021800,	P150, P42550
WT1813	HENDRICKSON HT230, INTRAAX	20889	P126
WT1814	HENDRICKSON INTRAAX	21699	P161
WT1815	SAF INTRADISC 20mm eye	2376007101, 2376008000	P183M2

EQUALISER ROCKERS

EQUALISER ROCKERS 148-149

watts

EQUALISER ROCKERS

The Watts equalizer rockers are high quality carbon content and metallurgical engineered to OEM specifications for high performance and safety. The equaliser tensile strength and grade of the casting meets the industry standards for quality control and safety.

Part No	Description	Application	X Reference	
WT1002	Equaliser Rocker 8ft 1 inch Spread Uses WT1101 Bush & WT1201 Pin	Reyco 21B	T5427 SP1196 FQ1155	
WT1005	Equaliser Rocker 8ft 1 inch Spread Uses WT1101 Bush & WT1201 Pin	Fruehauf Propar	ULA15192 ULA21380 UXA0017 SP1165 FQ1153	
WT1006	Equaliser Rocker 8ft 1 inch Spread Uses WT1101 Bush & WT1201 Pin	General Purpose Ruby Owen, Fuwa-Khitch York, TMC, Colrain Sinclair, ETE	59.900007 ETE289 SF0007 SP1182 FQ1151	
WT1007	Equaliser Rocker 10ft 1 inch Spread Uses WT1101 Bush Original Wing Style	Fruehauf Propar	ULA21382 SP1166C FQ1172	
WT1013	Equaliser Rocker 9ft 1 inch Spread Uses WT1101 Bush Original Wing Style	Fruehauf Propar	ULA21381 SP1192 FQ1163	

Part No	Description	Application	X Reference	
WT1014	Equaliser Rocker 9ft 1 inch Spread Uses WT1105 & WT1106 Bush	Freighter VA35 & TAA35 MK11, TAA40	237-00427 SP1153 FQ1160	
WT1015	Equaliser Rocker 9ft 1 inch Spread Uses WT1101 Bush & WT1201 Pin	Application Ruby Owen, Fuwa-Khitch York, TMC, Colrain Sinclair, ETE	59.90002 SF0020 CS300 SP1190 FQ1162	
WT1016	Equaliser Rocker 10ft 1 inch Spread Uses WT1101 Bush & WT1201 Pin	General Purpose Ruby Owen, Fuwa-Khitch York, TMC, Colrain Sinclair, ETE	59.90001 SF0010 SP1183 FQ1171	
WT1017	Equaliser Rocker 10ft 1 inch Spread Uses WT1101 Bush & WT1201 Pin	Freighter VE50	237-00453 FQ1175	
WT1018	Equaliser Rocker, 8ft 1" Spread Use WT1101 & WT1201	Freighter VE50 TD 2.4 Tri	237-00446 29457 FQ1156	
WT1019	Equaliser Rocker 9ft 1 inch Spread Uses WT1101 Bush & WT1201 Pin	Freighter VE50 2.7 Tri	237-00437 SP1156 SP1183 FQ1166 24950	

TORQUE ROD & EQUALISER PIN ASSEMBLIES & BUSHES

WATTS – GENUINE QUALITY

Feature & Benefits

The Watts torque rod pin & nut assembly are manufactured from high carbon steel to ensure safety and prolong service life. The pin is then machined with high accuracy to conform to the equalizer bush & equalizer rocker.

The pin is also heat treated this giving the equaliser and torque rod pin strength and also stability within the housing. All the equaliser and torque rod pin head bolts are clearly marked with the Watts Logo to identify you are fitting a genuine Watts product. If any of our products do not show the Watts logos then beware this is not a Watts genuine quality product.

This product is used widely in severe conditions like quarry, mines and road trains ect. This component is a high labour intensive part to fit and when you consider the overall cost, the Watts brand will not be compromised by cheaper brands.

MULLINS – ORIGINAL EQUIPMENT QUALITY

The Mullin high quality rubber bush is well known and is requested by many fleet repairers across the commercial vehicle industry. The Mullins name has been around for 50 years manufacturing for original equipment, hence the product performance & safety are the critical issues when choosing a quality suspension bush.

The range of equalizer & torque rod bushes are clearly marked with the Mullins name and still made in the USA. There again when purchasing your suspension bushes on your next repair job insist on Mullins. Remember if it's not marked Mullins on the bush then it's not the genuine Mullins item you're fitting.

EXTREME HEAVY DUTY SUSPENSION KITS

watts

When the tough get going you need to know that your rig is in top condition for the rugged terrain that Australia is known for, tough! When replacing the all important suspension components like equaliser pin assemblies and equaliser rubber bushes look no further than the Watts Extreme Heavy Duty Suspension Kits.

The most important safety components of your vehicle are suspension and the brake foundation. These two systems which work integrally together are crucial in the quality of the components being replaced and of course the cost of labour fitting them is a decision that needs careful consideration.

So, if you require a product that is high quality, delivers high performance and service life the Watts Extreme Heavy Duty Suspension Kit is your answer.

- High quality carbon steel equaliser pin & nut
- Machined with high accuracy to conform to OE quality
- Heat treated for strength, durability & safety
- High quality polyurethane equaliser bushes
- Use in severe service conditions, road - trains, mines & quarry applications
- Unique Watts Logo stamping to identify its genuine Watts Quality

Part No	Description	Application	
WT 1101 Mullins also available WT1101M Watts	Equaliser Bush I. D. 50mm O.D. 89mm L.G. 111mm	Fruehauf UXA 0004 Freighter 203-02448 VE50 suspension New McGrath, FUWA KHitch Late Haulmark, York, Colrain, TMC	
WT1101U Heavy Duty Polyurethane	Equaliser Bush Urethane I. D. 50mm O.D. 89mm L.G. 111mm	Fruehauf UXA 0004 Freighter 203-02448 VE50 suspension New McGrath, FUWA KHitch Late Haulmark, York, Colrain, TMC York, Colrain, TMC suspension	
WT1102	Equaliser Bush O.D. 83mm L.G.98mm	Hutch H2200 Fruehauf UCA 0472 McGrath N2514	
WT1103	Equaliser Bush O.D. 83mm L.G. 111mm	Freighter 161-07025 TAA 49' suspension TAA 39' suspension Fuwa KHitch	
WT1104	Equaliser Bush I. D. 50mm O.D. 79mm L.G. 108mm	Frieghter 203-00021 TAA 29' + 30 suspension Early Hallmark	
WT1105	Equaliser Bush Outer I. D. 50mm O.D. 79mm L.G. 108mm	Freighter 203-01525 TA35,36,37,40 suspension	
WT1106	Equaliser Bush Inner I. D. 50mm O.D. 86mm L.G. 48mm	Freighter 203-01525 TA35,36,37,40 suspension	
WT1109	Equaliser Bush I. D. 50mm O.D. 79mm L.G. 114mm	Reyco 08363-01 101, 101A, 102W, suspension	

TORQUE ROD & EQUALISER PIN ASSEMBLIES & BUSHES

Part No	Description	Application	
WT1110	Equaliser Bush I. D. 50mm O.D. 86mm L.G. 112mm	Reyco T5524 21B suspension	
WT1111	Equaliser Bush I. D. 50mm O.D. 95-92mm L.G. 69mm	DANA Webb L1125 26 suspension	
WT1112A	Equaliser Bush I. D. 50mm O.D. 79mm L.G. 98mm	Reyco Transpo 0649-00 Transpo SHD 88 suspension	
WT1113	Air Spring Bush I. D. 50mm O.D. 60mm L.G. 102mm	BPW 02.0316.06.00	
WT1113S	Air Spring Bush I. D. 50mm O.D. 57mm L.G. 102mm	BPW 02.0316.90.00 suit OM/OT air spring eye	
WT1115	Equaliser Bush I. D. 50mm O.D. 62mm L.G. 120mm	IHC/International 4 spring	
WT1118	Pivot Bush	York Tecair 1 & 2 suspension	
WT1119	Pivot Bush I. D. 50mm O.D. 150mm L.G. 50mm	York FB suspension Inner & Outer kit Qty 2	

Part No	Description	Application	
WT1120	Pivots Pin Assembly	York FB suspension Use with WT119 pivot bushes	
WT1201	Equaliser Bolt Assembly O.D. 50mm L.G. 222mm THD: 25.4mm	Fruehauf ULA 5183 Freighter VE50-20302632 FUWA KHitch York, Colrain, TMC suspension	
WT1201KIT Extreme heavy duty suspension kit	Equaliser Bolt Assembly O.D. 50mm L.G. 222mm THD: 25.4mm	Fruehauf ULA 5183 Freighter VE50-20302632 FUWA KHitch York, Colrain, TMC suspension	
WT1241	End Beam Tri-Functional Bush	Hendrickson Intraax SAF Intradisc OEM #: 4177302800	
WT1242	End Beam Bush - Bolt Kit	Hendrickson Intraax SAF Intradisc OEM # : 3341104819	
WT1207	Equaliser Pin O.D. 50mm L.G. 175mm	Freighter TA29, 203-00360	
WT1301 Mullins also available WT1301M Watts	Torque Rod Bush I. D. 32mm O.D. 56mm L.G. 60mm	Fruehauf, Freighter TAA & VE50 Hallmark, McGrath, Fuwa KHitch Colrain, TMC, York suspensions	
WT1301U Polyurethane Heavy Duty	Torque Rod Bush I. D. 32mm O.D. 56mm L.G. 60mm	Fruehauf, Freighter TAA & VE50 Hallmark, McGrath, Fuwa KHitch Colrain, TMC, York suspensions	

Part No	Description	Application	
WT1302	Torque Rod Bush I. D. 25mm O.D. 49mm L.G. 76mm	Fruehauf UCA 3754 S series suspension Freighter TAA29	
WT1303	Torque Rod Bush I. D. 49mm O.D. 56mm L.G. 57mm	Freighter 203-00052 TAA29 suspension	
WT1306	Torque Rod Bush I. D. 32mm O.D. 80/54mm L.G. 50mm	Alternate to WT1304 & WT1305 & WT1417	
WT1308	Torque Rod Bush I. D. 22mm O.D. 48mm L.G. 76mm	Ruby Owen 6425, M series Dayton, Reyco-Transpo SHD88, Hallmark	
WT1309	Torque Rod Bush I. D. 25mm O.D. 60/45mm L.G. 68mm	Ruby Owen 6431A, R series Reyco, T2242 & 102 suspension Hallmark	
WT1310	Torque Rod Bush I. D. 27mm O.D. 60/46mm L.G. 76mm	Reyco 1842 102 & 102W suspension New type bush 1" I.D. use WT1315	
WT1311	Torque Rod Bush I. D. 27mm O.D. 60/46mm L.G. 76mm	Reyco T5493 21B suspension	

Part No	Description	Application	
WT1312	Torque Rod Bush I. D. 22mm O.D. 49mm L.G. 76mm	Same as WT1308 but not stepped	
WT1315	Torque Rod Bush I. D. 25mm O.D. 60/49mm L.G. 76mm	Reyco 1842 102 & 102W suspension New type bush 1" I.D.	
WT1401	Torque Rod Bolt Assembly O.D. 32mm L.G. 152mm THD. 25.4mm	Fruehauf P & F series Freighter VE50, McGrath. TMC Fuwa KHitch, Colrain & York	
WT1401KIT Extreme heavy duty suspension kit	Torque Rod Bolt Assembly O.D. 32mm L.G. 152mm THD. 25.4mm	Fruehauf P & F series Freighter VE50, McGrath. TMC Fuwa KHitch, Colrain & Yorkv	
WT1404	Torque Rod Bolt Assembly O.D. 49mm L.G. 159mm O.D. 19mm	Freighter 203-00126 & 151- 15329 TA29 suspension	
WT1405	Torque Rod Bolt Assembly O.D. 32mm L.G. 156mm THD. 25mm	Freighter TAA35, 36, 37, 38 suspension	
WT1450	Torque Rod Hanger "weld washer"	Repair washer to repair worn torque rod bolts	

WHEEL END PARTS

WHEEL END PARTS	160-166
AXLE HUBS	167
WHEEL SPACERS	168
FIFTH WHEEL DISC & DISC KITS	168
DRAW BAR BUSHES	169

watts

WHEEL END PARTS

The wheel end parts are crucial when replacing the wheel studs, nuts, rim clamps and axle spacers, tab washers. These components are graded to original equipment standards to achieve safety standards on all commercial vehicle applications. To simplify the replacement of these components we have introduced kits that include axle nuts, tab washers, lock nuts inner and outer and lock washers ensuring all components replaced are of the highest quality.

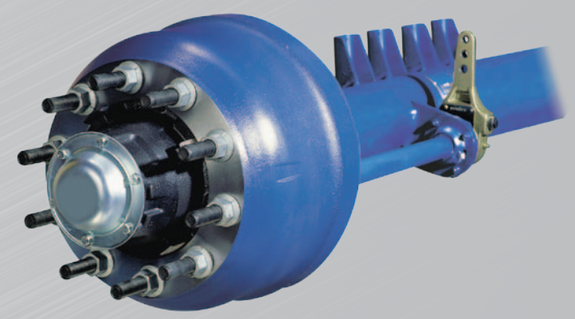

Part No	Description	Application	
WT4006 USE WT4016 kit	Axle Nut-Outer I.D. 41mm O.D. 82mm THD. 16tpi	Rockwell RN, ARN, TN &ATN axles Freighter 161-06044 & Eaton F-1530 DANA 10409, STD Forged 103102-001	
WT4007 USE WT4016 kit	Lock Washer I.D. 68mm O.D. 100mm	Suit above axle outer nut	
WT4007T USE WT4016 kit	Tab Washer I.D. 71mm O.D. 105mm	Suit above axle nut & lock washer	
WT4008 USE WT4016 kit	Axle Nut-Inner	Suit above axle nut, lock washer & tab washer supplied as a kit	
WT4015	Axle Lock Nut	Can replaced with WT4016	
WT4016	Axle wheel nut end kit WT4006, WT4007, WT4007T & WT4008	Rockwell RN, ARN, TN &ATN axles Freighter 161-06044 & Eaton F-1530 DANA 10409, STD Forged 103102-001	
WT4055 USE WT4058 kit	Axle Nut Outer I.D. 62mm O.D. 95mm TH. 11mm	York P/N 502461	

Part No	Description	Application	
WT4056 USE WT4058 kit	Lock Washer I.D. 63mm O.D. 101mm TH. 5mm	York P/N 501123 Suits above Axle nut outer	
WT4056T USE WT4058 kit	Tab Washer	York P/N 790044v Suits above axle nut & lock washer	
WT4057 USE WT4058 kit	Lock Nut Inner	York P/N 502462 Suits WT4055, WT4056, WT4056T & WT4057	
WT4058 Axle Nut Kit Contents: WT4056 WT4056T WT4057	York 501123 502461 502462 79004 kit	York 2782, 2784 & 2950 axle	
WT4059 Wheel End Axle Nut kit Contents: WT4060 WT4061 WT4062	ROR, Rockwell Contains: 21205571 21020810 21210819	Rockwell axle	
WT4060 USE WT4059 kit	Axle Nut Inner I.D. 65mm O.D. 95mm TH. 11mm	Rockwell 21205571	
WT4061 USE WT4059 kit	I.D. 65mm O.D. 95mm TH. 6mm	Rockwell 21020818 Suits above axle nut inner	

Part No	Description	Application	
WT4062 USE WT4059 kit	Axle Nut Outer	Rockwell 21210819 Suits WT4061 7 WT4061	
WT4063 USE WT4065	Axle Nut I.D. 88mm O.D. 122mm	Fruehauf ACF 1823-1	
WT4064 USE WT4065	Tab Washer I.D. 89mm O.D. 108mm	Fruehauf ALA 18701	
WT4065	Axle Nut Kit	Fruehauf ACF1823-1 & ALA18701 Contains: WT4063 & WT4064	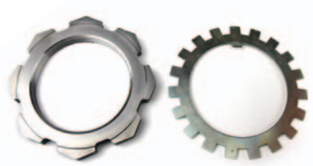
WT4020	Axle Hub Cap O.D 159mm THD: 8tpi	Fruehauf ACC7538-900 Including Propar axles	
WT4020A-G	Axle Hub Cap Cast M158X3 External Thread	Fruehauf Propar	
WT4029	Axle Hub Cap Aluminium 6 hole 5 1/2"PCD	General Purpose (Oil) 343-4009	

Part No	Description	Application	
WT4033	Axle Hub Cap Aluminium 6 hole 5 1/2"PCD	General Purpose Truck 343-4095	
WT4037	Axle Hub Cap	BPW New Gen 03.212.24.07.0	
WT4047	Drive Axle Hub Gasket	Rockwell, Eaton 330-3111	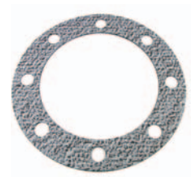
WT4090	Bearing Spacer TH: 3.17mm	Hendrickson HM218248	
WT4091	Bearing Spacer TH: 4.76mm	Hendrickson HM218248	
WT4507	Axle Seal I.D. 38mm O.D. 76 X 6.35mm	Freighter MK & VA axles	
WT4530	Axle Seal Carrier I.D. 95mm TH: 19mm	BPW 05.370.07.43.0 New Gen	

Part No	Description	Application	
WT4531	Axle Seal Outer I.D. 129mm O.D. 165mm	BPW 03.310.97.30.0 New Gen	
WT4532	Axle Seal Inner I.D. 121mm O.D. 157mm	BPW 03 310.97.3.0 Transpec 019007907 New Gen	
WT4534	Axle Oil seal carrier I.D. 95mm O.D. 150mm TH: 32mm	BPW 03.370.07.47.0 Transpec 019003136 New Gen	
WT4536	Axle Oil Seal I.D. 141mm O.D. 167mm TH: 12.8mm	BPW 02.5664.46.57 New Gen	
WT6001	Wheel Stud - GP OAL: 76mm TH: 3/4"-10tpi	Fruehauf : 535886 Rubery Owen: WP326 Transpec: 019008280	
WT6002	Wheel Nut - GP O.D. 32mm TH: 3/4"-10tpi	Fruehauf : 535886 Rubery Owen: WP326 Transpec: 019008280 Suits: WT6001 stud	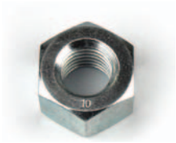
WT6003	Wheel Stud OAL: 76mm X 5/8" THD 11tpi	Mc Grath 5 Spoke Transpec 019006715	

Part No	Description	Application	
WT6004	Wheel Nut 1 1/8" X 5/8" THD	McGrath 5 Spoke Suits: WT6003 stud	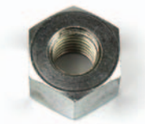
WT6005	Wheel Stud OAL: 89mm X 3/4"-12tpi	Freighter 208-00110 Freighter MK5 axle	
WT6006	Wheel Nut 1 1/8" X 3/4"-12tpi	Freighter MK5 axle use with WT6005 stud	
WT6019	Wheel Nut ISO 10 stud X 22mm	Suit 10 stud axle	
WT6031	Wheel Stud OAL: 67mm X 5/8-11tpi	Kelsey WP-177 Ford DSTZ1151A	
WT6032	Wheel Nut 11 1/16" X 5/8"-11pti	Kelsey WP-2 Webb 74611 Suits: WT6031	
WT6033	Wheel stud/nut kit	Suits WT6031 & WT6032	

WHEEL END PARTS

Part No	Description	Application	
WT6051	Wheel Rim Clamp 73mm wide 25mm reach 19mm hole	Fruehauf 535884 Freighter 161-06003 BPW: 03.372.03.02	
WT6054	Wheel Rim Clamp 67mm wide 29mm reach 16mm hole	McGrath R.C.4.G	
WT6056	Wheel Rim Clamp 101mm wide 33mm reach 19mm hole	Malco 610 hubs on Freighter Fruehauf, Ruby Owen & Rockwell axles	
WT6057	Wheel Rim Clamp 101mm wide 25mm reach 19mm hole	Malco 610 General Purpose, Fruehauf, Rubery Owen	
WT6058	Wheel Rim Clamp 73mm wide 64mm reach 19mm hole	Universal Same as WT6051 with a longer reach	
WT6059	Wheel Rim Clamp 64mm wide 13mm reach 19mm hole	Kelsey WP-722	
WT6068	Wheel Rim Clamp Location front	General Purpose	

Part No	Type		Spec: PCD	MFG	Bearing Type	Seal
WT6711	5 Spoke	9 1/2" 241.30mm	11 1/4" 285.75mm	Fruehauf Propar	518410	WT4505
WT6716	5 Spoke	9 7/16" 239.78mm	11" 279.40mm	Freighter, York Rockwell	HM218210 HM212011	WT4520
WT6728	10 stud 285PCD	8 25/32" 223mm	11 1/4" 285.75mm	Freighter, York Rockwell	HM218210 HM212011	WT4520
WT6729	10 stud 335PCD	11 1/4" 285.75mm	13 3/16" 335mm	Freighter, York Rockwell	HM218210 HM212011	WT4520

Part No	Description	
WT6763	WHEEL SPACER - CORRIGATED 4.00" WIDE X 20" DIA	
WT6764	WHEEL SPACER - CORRIGATED 4.25" WIDE X 20" DIA	
WT6769	WHEEL SPACER - NON CORRIGATED 4.50" WIDE X 20" DIA	

FIFTH WHEEL DISC & DISC KITS

Part No	Description	
WT9601	LUBE LINER ROUND	
WT9601KIT	LUBE LINER AND WASHER KIT	

Part No	Description	
53004	D/BAR EYE BUSH 50MM SPLIT	
53005	50MM SOLID BUSH-TOW EYE	
53006	50MM SOLID BUSH 1ST OVERSIZE	
53007	50MM SOLID BUSH 2ND OVERSIZE	
WT7131	RINGFEEDER - MAJOR REPAIR KIT	
WT7137	RINGFEEDER - MAIN PIN & SPRING KIT	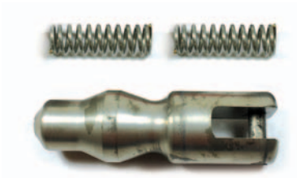

DRAW BAR BUSHES

CROSS REFERENCE LIST

COMPETITORS CROSS REFERENCE	172-182
CAMSHAFT OEM CROSS REFERENCE	183-185
WATTS RECOMMENDED STOCKIST LIST	186-187
METRIC CONVERSION TABLE	188

watts

This section makes parts interpreting more accurate when communicating with your customers.

It's important to remember that customers never forget when you send them the wrong parts for the all important job.

Utilising this section will assist identifying the correct parts before ordering them and delivering the correct part to your customers.

The original equipment part numbers listed in this section will help you do this as well as cross referencing competitors part numbers.

In all cases please identify the application first before using this section as this is only used as a cross reference tool guide.

"FIND THE RIGHT PARTS THE FIRST TIME"

ARE YOU TIRED OF FITTING CHEAP QUALITY PARTS AND FINDING OUT THEY COST YOU MORE IN THE LONG-TERM?

CROSS REFERENCE LIST
FROM COMPETITORS TO WATTS PART NUMBERS

BPW

Part No	WATTS
0203142KIT-1ALP	TBA
0203142KIT-1ALT	TBA
0203142KIT-P	TBA
0203142KIT-T	TBA
0203159KIT-1AL	TBA
0203160KIT	TBA
0203169KIT	TBA
0203169KIT-AL	TBA
0252051006	WT3317
0256160590	WT3142
0256644657	WT4536
0256760100	WT3124
0256780000	WT4535
0256785300	WT4019
0256792300	WT3140
0262016603	WT3431
0262020401	WT3408
0300108050	WT3457
0301004080	WT4027
0301005170	WT4026
0308442020	WT3458
0308446220	WT3319
0308452060	WT3461
0310667080	WT6606
0310667570	WT6609
0310667620	WT4038
0311222240	WT3210
0311233030	WT3208
0311233040	WT3209
0311233080	WT3320
0311244300	WT2111
0311314010	WT2210
0311444030	WT3410
0312042020	WT3216
0312043090	WT3144
0312043100	WT3143
0312063010	WT3130
0316723020	WT3321
0317723100	WT3316
0321209040	WT4017
0321209050	WT4039
0321224070	WT4037
0322902010	WT3012
0322902090	WT3015
0322902100	WT3016
0323213020	WT3407
0326014080	WT3129
0326216030	WT4004
0326217080	WT4003
0326217120	WT4005
0329902010	WT3010
0329902020	WT3011
0331032090	WT3125
0331081000	WT3139
0331097150	WT4527
0331097300	WT4531
0331098140	WT4526
0331098210	WT4532
0331098240	WT4533
0332011100	WT3141
0332013020	WT3128
0333134020	WT3406
0333134050	WT3429
0335030010	WT3131
0337007470	WT4534
0337900130	WT4018
0338007020	WT3127
0339734100	WT3460
0339744060	WT3470
0505000130	WT3430
0509114190	WT5038
0509126642	WT5047
0509700KIT	WT9012
0509700KIT	WT9012N
0509705170	WT2015
0509705180	WT2016
0509705230	WT2023
0509705240	WT2024
0509705260	WT2040
0537007430	WT4530
0539726030	WT3456
0539746060	WT3459
0539758030	WT3476
0542940010	RML7992
0542940030	RML7052CP
0542940036	RML7992
0542940040	RML7052CP
0542940090	RML7052CP
0542940141	RML7992CP
0542940281	RML7052CP
0542940340	RML7052CP
0542940390	RML7992CP
0542940471	RML7992CP
0542940501	RML7992CP
0542940611	RML7992CP
0542940910	RML7051
0542942200	RML7051
0542942250	RML7052CP
0542942260	RML7992
0542942560	RML7051
0542942570	RML7052CP
0542942580	RML7992
0542943200	RML7052CP
0542943200	RML7051CP
0542943210	RML7051CP
0542943350	RML7051CP
0542943360	RML7052CP
0542943510	RML7992CP
0542943600	RML7992CP
0542943650	RML7051CP
0542943660	RML7052CP
0542943660	RML7051CP
0542943690	RML7992CP
0980102910	WT3338
0980102910	WT3341
098064218BH95	WT3338
098064218BHNG	WT3337
098063620BH95	WT3341

COLRAIN

Part No	WATTS
AF4524	WT4536
AP0634	WT4026
AP0635	WT4027
AP4001	WT4001
AP4002	WT4002
AP4003	WT4003
AP4004	WT4063
AP4005	WT4064
AP4006	WT4006
AP4007	WT4007
AP4008	WT4008
AP4009	WT4009
AP4010	WT4010
AP4011	WT4016
AP4012	WT4012
AP4013	WT4014
AP4014	WT4011
AP4016	WT4018
AP4020	WT4020H
AP4021	WT4021
AP4022	WT4022

COLRAIN CONTINUED

Part No	WATTS
AP4023	WT4023
AP4024	WT4020
AP4029	WT4030
AP4030	WT4035
AP4031	WT4029
AP4032	WT4038
AP4034	WT4028
AP4035	WT4036
AP4042	WT4024
AP4080	WT4524
AP8680	WT4007T
FB2002	WT2002
F82107	WT2107
FB2001	WT2001
FB2003	WT2003
FB2004	WT2004
FB2007	WT2007
FB2008	WT2008
FB2012	WT2012
FB2013	WT2029
FB2014	WT2030
FB2015	WT2031
FB2016	WT2032
FB2022	WT2025
FB2023	WT2026
FB2031	WT2015
FB2032	WT2016
FB2039	WT2017
FB2040	WT2018
FB2047	WT2033
FB2048	WT2034
FB2049	WT2035
FB2050	WT2036
FB2051	WT2023
FB2052	WT2024
FB2102	WT2101
FB2103	WT2103
FB2104	WT2208
FB2108	WT2104
FB2201	WT2201
FB2202	WT2202
FB2203	WT2203
FB2209	WT2214
FB261 I	WT2011
FB3001	WT3001
FB3002	WT3002
FB3006	WT3006
FB3007	WT3007
FB3036	WT5043
FB3100	WT3100
FB3101	WT3101
FB3102	WT3102
FB3103	WT3103
FB3106	WT3106
FB3107	WT3107
FB3113	WT3113
FB3114	WT3114
FB3115	WT3115
FB3117	WT3117
FB3118	WT3118
FB3120	WT3120
FB3121	WT3121
FB3122	WT3122
FB3123	WT3123
FB3141	WT3123
FB3149	WT2209
FB3151	WT2211
FB3153	WT3124
FB3154	WT3130
FB3155	WT2210
FB3156	WT3125
FB3159	WT3128
FB3163	WT3127
FB3164	WT3140
FB3165	WT3139
FB3166	WT3129
FB3167	WT3126
FB3200	WT3304S
FB3201	WT3201
FB3202	WT3202
FB3203	WT3203
FB3204	WT3204
FB3206	WT3206
FB3207	WT3207
FB3212	WT3212
FB3214	WT3309
FB3215	WT3345
FB3217	WT3208
FB3219	WT3209
FB3231	WT3213
FB3235	WT3215
FB3237	WT3305
FB3301	WT3301
FB3302	WT3302
FB3304	WT3304
FB3401	WT3401
FB3402	WT3402
FB3403	WT3403S
FB3404	WT3404
FB3405	WT3405S
FB3406	WT3421
FB3407	WT3420
FB3411	WT3424
FB3412	WT3423
FB3415	WT3417
FB3418	WT3422
FB3422	WT3425
FB3424	WT3432
FB3425	WT3433
FB3449	WT3453
FB3451	WT3451
FB3452	WT3452
FB3456	WT3466
FB3457	WT3465
FB3460	WT3463
FB3461	WT3460
FB3462	WT3471
FB3466	WT3458
FB3468	WT3459
FB3469	WT3457
FB5020	WT5020
FB5021	WT5021
FB5024	WT5022
FB5025	WT5028
FB5030	WT5030
FB5032	WT5032
FB5038	WT5036
FB5042	WT5037
FB5044	WT5052
SP1 305	WT1305
SP1101	WT1101M
SP1102	WT1102
SP1105	WT1105
SP1108	WT1103
SP1120	WT1106
SP1130	WT1110
SP1132	WT1108
SP1133	WT1109
SP1134	WT1112S
SP1165	WT1005
SP1194	WT1003
SP1195	WT1004C

CROSS REFERENCE LIST
FROM COMPETITORS TO WATTS PART NUMBERS

COLRAIN CONTINUED

Part No	WATTS
SP1196	WT1002
SP1201	WT1201
SP1204	WT1202
SP1221	WT1205
SP1225	WT1205S
SP1301	WT1301M
SP1302	WT1302
SP1303	WT1303
SP1304	WT1304
SP1308	WT1308
SP1309	WT1309
SP1313	WT1306
SP1314	WT1310
SP1315	WT1311
SP1104	WT1104

FLEETLINE

Part No	WATTS
FL08.296	WT4021
FL08.6286A	WT4028
FL08.6287A	WT4015
FL08.6290A	WT4017
FL08.6291A	WT4016
FL08.6300A	WT4524
FL08.6302A	WT5426
FL08.6305A	WT4530
FL08.6306A	WT4531
FL08.6307A	WT4532
FL08.6309A	WT4534
FL08.6310A	WT4535
FL08.6311A	WT4536
FL08.6312A	WT4025
FL08.6315A	WT4027
FL08.6316A	WT4026
FL08.8288A	WT4037
FL10.351	WT5020
FL10.353	WT5028
FL10.355	WT5025
FL10.367	WT5021
FL10.6351A	WT5022
FL12.297	WT4013
FL12.391	WT4008
FL12.392	WT4007
FL12.393	WT4006
FL12.394.	WT4007T
FL12.398	WT4012
FL12.399	WT4014
FL12.400	WT4002
FL12.402	WT4009
FL12.404	WT4001
FL12.405	WT4010
FL12.406	WT4054
FL12.6391A	WT4011
FL12.6392A	WT4053
FL12.6393A	WT4003
FL12.6395A	WT4005
FL12.6401A	WT4063
FL14A	WT3330
FL15.532	WT3320
FL15.537	WT3216
FL15.540	WT3308
FL15.542	WT3305
FL15.6525A	WT3304
FL15.6527 A	WT3304S
FL15.6531A	WT3201
FL15.6532A	WT3309
FL15.6534A	WT3319
FL16.561	WT3206
FL16.563	WT3207
FL16.6561A	WT3208
FL17.574	WT2004F
FL17.575	WT2003F
FL17.580	WT2004
FL17.581	WT2003
FL17.582	WT2006
FL17.583	WT2005
FL17.586	WT2004F
FL17.587	WT2003F
FL17.620	WT2008
FL17.621	WT2007
FL17.622	WT2002
FL17.623	WT2001
FL17.628	WT2028
FL17.629	WT2027
FL17.632	WT2012
FL17.633	WT2011
FL17.634	WT2018
FL17.635	WT2017
FL17.6651A	WT2015
FL17.6652A	WT2016
FL17.6653A	WT2023
FL17.6654A	WT2024
FL17.682	WT2030
FL17.683	WT2029
FL17.684	WT2026
FL17.685	WT2025
FL17.8652A	WT2016
FL18.726	WT2020
FL18.727	WT2019
FL18.738	WT2022
FL18.739	WT2021
FL18.804	WT2038
FL18.805	WT2037
FL18.808	WT2014
FL18.809	WT2013
FL18.810	WT2032
FL18.811	WT2031
FL18.832	WT2034
FL18.833	WT2033
FL19.6852A	WT3460
FL19.6853A	WT3470
FL19.6856A	WT3456L
FL19.6856A	WT3456
FL19.853	WT3451
FL19.856	WT3454
FL19.857	WT3473
FL19.860	WT3453
FL19.862	WT3471
FL19.864	WT3466
FL19.866	WT3465
FL19.875	WT3464
FL20.6881A	WT3457
FL20.6882A	WT3458
FL20.6883A	WT3461
FL20.881	WT3452
FL21.6951A	WT5047-NG
FL21.889	WT5032
FL21.895	WT5030
FL21.898	WT5042
FL21.922E	WT5036
FL21.930	WT5043
FL23.1026	WT3212
FL27. 1208	WT3007
FL27. 7452A	WT2210
FL27.1 197	WT3006
FL27.1191	WT2216
FL27.1194	WT2013
FL27.1195	WT2107
FL27.1196	WT2109
FL27.1198	WT2102
FL27.1200	WT2101
FL28.1232	WT2208
FL28.1235	WT2202

FLEETLINE CONTINUED

Part No	WATTS
FL28.1236	WT2201
FL28.1237	WT2203
FL28.1238	WT2211
FL28.1240	WT3119
FL28.1241	WT3120
FL28.1252	WT3114
FL28.1253	WT3115
FL28.1257	WT2104
FL28.7554A	WT2111
FL281233	WT2209
FL29.1267	WT3113
FL29.1269	WT3122
FL29.1270	WT3123
FL29.1274	WT3118
FL29.1275	WT3121
FL29.1301	WT3107
FL29.1302	WT3100
FL29.1307	WT3103
FL29.1308	WT3102
FL29.1309	WT3112
FL29.1310	WT3101
FL29.1312	WT3117
FL29.1322	WT3106
FL29.1326	WT3105
FL29.7657A	WT3129
FL29.7659A	WT3131
FL29.7660A	WT3140
FL29.7661A	WT3141
FL29.7662A	WT3124
FL29.7662A	WT3139
FL29A	WT3333SS
FL30. 1362	WT3002
FL30.1358	WT3005SQ
FL30.1363	WT3001
FL30.1385	WT1313
FL30.7752A	WT3010
FL30.7753A	WT3011
FL30.7754A	WT1315
FL30.7755A	WT1316
FL31.1405	WT2055P
FL32.1425	WT3403S
FL32.1426	WT3404
FL32.1427	WT3405S
FL32.1428	WT3403S
FL32.1428.125	WT3404S
FL32.1429	WT3419
FL32.1441	WT3421
FL32.1441.125	WT3422
FL32.1442	WT3420
FL32.1445	WT3432
FL32.1446	WT3433
FL32.1449	WT3424
FL32.7908A	WT3429
FL33.1477	WT5100
FL34.1525	WT3205
FL34.1526	WT3425
FL34.1527	WT3218
FL34.1529	WT3401
FL34.1530	WT3402
FL34.1532	WT3418
FL34.1533	WT3204
FL34.8031A	WT3417
FL34.8032A	WT3202
FL34.8033A	WT3311
FL34.8034A	WT3314
FL34.8035A	WT3315
FL34.8038A	WT3320
FL34.8041 A	WT3407
FL34.8046A	WT3430
FL34.8047A	WT3431
FL35.1576	WT3215
FL35.1577	WT3214
FL35.1580	WT3203
FL35.1581	WT3217
FL35.8101A	WT3302
FL36.1647	WT2000
FL37.904A	WT3406
FL43.7036	WT9005
FL43.7037	WT9008
FL43.7038	WT9006
FL43.7044	WT9007
FL43.8351 A	WT3108
FL43.8352A	WT3109
FL43.8354A	WT3111
FL43.8356A	WT3132
FL43.8357A	WT9012
FL438353A	WT3110
FL52.1301	WT6051
FL53.1501	WT6001
FL53.1561	WT6002
FL80.2000	WT1101
FL80.2001	WT1102
FL80.2002	WT1103
FL80.2003	WT1104
FL80.2004	WT1106
FL80.2005	WT1105
FL80.2009	WT1110
FL80.2011	WT1112S
FL81.2050	WT1201
FL81.2052	WT1203
FL81.2054	WT1205
FL81.2055	WT1205S
FL82.2109	WT1002
FL82.2111	WT1004C
FL82.2112	BP1165
FL83.2151	WT1301M
FL83.2152	WT1302
FL83.2154	WT1304
FL83.2155	WT1305
FL83.2158	WT1308
FL83.2159	WT1309
FL83.2160	WT1310
FL83.2161	WT1311
FL88.2400	WT1401

FREIGHTER

Part No	WATTS
151-65057	WT6002
152-06206	WT3218
152-96210	WT3101
154-00471	WT2201
154-00472	WT2202
154-00482	WT2101
154-00485	WT3002
154-00523	WT3417
154-00580	WT3202
154-00630	WT3465
154-00768	WT2204
154-00769	WT2003
154-00804	WT3401
154-00805	WT3403S
154-00806	WT3452
154-00808	WT5032
154-00809	WT3207
154-00810	WT3201
154-00815	WT3114
154-00816	WT3115
154-00817	WT3005SQ
154-00822	WT6001
154-00823	WT3205
154-00824	WT3203
154-00827	WT3107

CROSS REFERENCE LIST
FROM COMPETITORS TO WATTS PART NUMBERS

FREIGHTER CONTINUED

Part No	WATTS
154-00828	WT3007
154-00834	WT2208
154-00835	WT3006
154-00837	WT3404S
154-00838	WT3405S
154-00840	WT3102
154-00841	WT3103
154-00842	WT3112
154-00854	WT2209
154-00856	WT5043
154-00860	WT3466
154-00861	WT3419
154-00864	WT2029
154-00865	WT2030
154-00872	WT3308
154-00886	WT3424
154-00888	WT3425
154-00890	WT3118
154-00891	WT2012
154-00892	WT2011
154-00893	WT3100
154-00894	WT3117
154-00895	WT3121
154-00896	WT3120
154-00897	WT3119
154-00910	WT3451
154-00924	WT2211
154-00926	WT5036
154-00927	WT3421
154-00928	WT3420
154-00929	WT3464
154-00931	WT2017
154-00932	WT2018
154-00944	WT5020
154-00982	WT5100
154-00983	WT2107
154-30106	WT5052
154-30109	WT3432
154-30110	WT3433
154-30111	WT3217
154-30112	WT3216
154-30116	WT2025
154-30117	WT2026
154-30120	WT3013
161-06003	WT6051
161-06009	WT4012
161-06010	WT4013
161-06044	WT4006
161-06046	WT4008
161-06060	WT4007
161-06077	WT4024
161-06105	WT2055P
161-06106	WT2055
161-06211	WT4014
161-07020	WT1302
161-07025	WT1108
161-07043	WT1301M

IVECO

Part No	WATTS
IT1101	WT1101M
IT1101P	WT1101U
IT1102	WT1102
IT1103	WT1108
IT1104	WT1104
IT1105	WT1105
IT1106	WT1106
IT1110	WT1110
IT1112	WT1112S
IT1116L	WT2033
IT1116R	WT2004
IT112.4	WT4002
IT11305	WT1305
IT11306	WT1306
IT11308	WT1308
IT11309	WT1309
IT114A	WT3330
IT1165	WT1005
IT1195	WT1004C
IT1196	WT1002
IT12.391	WT4008
IT12.392	WT4007
IT12.393	WT4006
IT12.394	WT4007T
IT12.397	WT4013
IT12.398	WT4012
IT12.400A	WT4063
IT12.402	WT4009
IT12.402A	WT4064
IT12.404	WT4001
IT12.405	WT4010
IT1201HD	WT1201
IT1202	WT1202
IT1205S	WT1205S
IT129.1308	WT3102
IT1301	WT1301M
IT1302	WT1302
IT1303	WT1303
IT1304	WT1304
IT1308P	WT1308U
IT1301P	WT1301U
IT1310N	WT1310
IT1311	WT1311
IT13456	WT3456
IT13457	WT3457
IT13458	WT3458
IT1401HD	WT1401
IT15.3304	WT3304
IT15.527	WT3201
IT15.537	WT3216
IT15.542	WT3305
IT16.562	WT3213
IT16.563	WT3207
IT16-561	WT3206
IT19.851	WT3469
IT19.853	WT3451
IT19.856	WT3454
IT19.86	WT3453
IT19.862	WT3471
IT19.863	WT3472
IT19.875	WT3462
IT19.875	WT3464
IT20.881	WT3452
IT2015	WT2015
IT2016	WT2016
IT2023	WT2023
IT2024	WT2024
IT2025	WT2025
IT2026	WT2026
IT2027	WT2035
IT2028	WT2036
IT2029	WT2017
IT2030	WT2018
IT21 .922E	WT5036
IT21.889	WT5032
IT21.895	WT5030
IT21.898	WT5042
IT2111	WT2111
IT2210	WT2210
IT23.1026	WT3212
IT27.1194	WT2103
IT27.1195	WT2107

IVECO CONTINUED

Part No	WATTS
IT27.1196	WT2109
IT27.1197	WT3006
IT27.1197	WT3008
IT27.1198	WT2102
IT27.1200	WT2101
IT27.1208	WT3007
IT28.1232	WT2208
IT28.1233	WT2209
IT28.1234	WT2209B
IT28.1235	WT2202
IT28.1236	WT2201
IT28.1237	WT2203
IT28.1238	WT2211
IT28.1240	WT3119
IT28.1241	WT3120
IT28.1252	WT2104
IT28.1253	WT3115
IT28.1257	WT2104
IT29 .1267	WT3113
IT29.1266	WT3133
IT29.1269	WT3122
IT29.1270	WT3123
IT29.1274	WT3118
IT29.1275	WT3121
IT29.1301	WT3107
IT29.1302	WT3100
IT29.1303	WT3137
IT29.1307	WT3103
IT29.1309	WT3112
IT29.1310	WT3101
IT29.1311	WT3104
IT29.1312	WT3117
IT29.1322	WT3106
IT29.1326	WT3105
IT30.1358	WT3005SQ
IT30.1362	WT3002
IT30.1362	WT3304S
IT30.1363	WT3001
IT3015	WT3015
IT3016	WT3014
IT31.1405	WT2055P
IT3110	WT3110
IT3111	WT3111
IT3129	WT3129
IT3131	WT3131
IT3132	WT3132
IT3139	WT3139
IT3140	WT3140
IT3141	WT3141
IT32 1426	WT3404
IT32.1425	WT3403S
IT32.1427	WT3405
IT32.1428	WT3403
IT32.1428A	WT3404
IT32.1428B	WT3405
IT32.1430	WT3400
IT32.1441	WT3421
IT32.1441A	WT3422
IT32.1442	WT3420
IT32.1445	WT3432
IT32.1446	WT3433
IT32.1449	WT3424
IT32.1450	WT3423
IT3202	WT3202
IT33.1476A	WT5100
IT3302	WT3302
IT3309	WT3309
IT3311	WT3311
IT3319	WT3208
IT3320	WT3320
IT3321	WT3321
IT34.1525	WT3205
IT34.1526	WT3425
IT34.1529	WT3401
IT34.153	WT3402
IT34.1531	WT3473
IT34.1532	WT3418
IT34.1533	WT3204
IT3406	WT3406
IT3407	WT3407
IT3415	WT3417
IT3429	WT3429
IT3430	WT3430
IT3431	WT3431
IT3459	WT3459
IT3460	WT3460
IT3470	WT3470
IT35.1576	WT3215
IT35.1577	WT3214
IT35.158	WT3203
IT35.1581	WT3217
IT4003	WT4003
IT4005	WT4005
IT4019	WT4019
IT4025	WT4025
IT4028	WT4028
IT4037	WT4037
IT43.7036	WT9005
IT43.7037	WT9008
IT43.7038	WT9006
IT43.7044	WT9007
IT4524	WT4524
IT4527	WT4527
IT4531	WT4531
IT4532	WT4532
IT4534	WT4534
IT4535	WT4535
IT4536	WT4536
IT5047	WT5047-NG
IT6001	WT6001
IT6002	WT6002
IT6051	WT6051
IT8.295	WT4020
IT8.296	WT4021
IT8.297	WT4022
IT9012	WT9012
ITBD10	WT6603
ITBD20	WT6605
ITBD30	WT6606
ITBD40	WT6605

KENWORTH

Part No	WATTS
T02-1999	WT1999
T02-2000	WT2000
T02-2001	WT2001
T02-2002	WT2002
T02-2003	WT2003
T02-2004	WT2004
T02-2005	WT2005
T02-2006	WT2006
T02-2009	WT2009
T02-2010	WT2010
T02-2011	WT2011
T02-2012	WT2012
T02-2013	WT2029
T02-2014	WT2030
T02-2022	WT2025
T02-2023	WT2026
T02-2031	WT2015
T02-2032	WT2016
T02-2039	WT2017

CROSS REFERENCE LIST
FROM COMPETITORS TO WATTS PART NUMBERS

KENWORTH CONTINUED

Part No	WATTS
T02-2040	WT2018
T02-2043	WT2027
T02-2044	WT2028
T02-2045	WT2035
T02-2046	WT2036
T02-2047	WT2033
T02-2048	WT2034
T02-2051	WT2023
T02-2052	WT2024
T02-2061	WT2003F
T02-2062	WT2004F
T02-2063	WT2039
T02-2064	WT2040
T02-2081	WT2055
T02-2088	WT2055P
T02-2101	WT2101
T02-2102	WT2102
T02-2103	WT2103
T02-2104	WT2208
T02-2201	WT2201
T02-2202	WT2202
T02-2203	WT2203
T02-2203N	WT2214
T02-2217	WT2111
T02-2218	WT2216
T02-2220	WT3144
T02-22I9	WT2104
T02-2301	WT9006
T02-2302	WT9005
T02-2303	WT9008
T02-2304	WT9007
T02-2310	WT9012
T02-2401	WT3330
T02-2411	WT3333
T02-2412	WT3331
T02-2413	WT3332
T02-2414	WT3334
T02-3001	WT3001
T02-3002	WT3002
T02-3005	WT3005SQ
T02-3006	WT3006
T02-3007	WT3007
T02-3010	WT3015
T02-3011	WT3016
T02-3012	WT3003-4
T02-3014	WT3011

Part No	WATTS
T02-3015	WT3010
T02-3100	WT3100
T02-3101	WT3101
T02-3102	WT3012
T02-3103	WT3103
T02-3105	WT3105
T02-3106	WT3106
T02-3107	WT3107
T02-3108	WT3108
T02-3109	WT3109
T02-3110	WT3110
T02-3111	WT3111
T02-3112	WT3112
T02-3113	WT3113
T02-3114	WT3114
T02-3115	WT3115
T02-3117	WT3117
T02-3118	WT3118
T02-3119	WT3119
T02-3120	WT3120
T02-3121	WT3121
T02-3122	WT3122
T02-3123	WT3105
T02-3125	WT3132
T02-3141	WT3123
T02-3149	WT2209
T02-3151	WT2211
T02-3153	WT3124
T02-3155	WT2210
T02-3156	WT3125
T02-3158	WT3143
T02-3159	WT3128
T02-3160	WT3142
T02-3163	WT3127
T02-3164	WT3140
T02-3165	WT3139
T02-3166	WT3129
T02-3167	WT3126
T02-3184	WT3219
T02-3185	WT3216
T02-3186	WT3217
T02-3187	WT3218
T02-3188	WT3141
T02-3189	WT3320
T02-3200	WT3304S
T02-3201	WT3201
T02-3202	WT3202
T02-3203	WT3203

Part No	WATTS
T02-3204	WT3204
T02-3205	WT3205
T02-3206	WT3206
T02-3207	WT3207
T02-3207B	WT3207B
T02-3212	WT3212
T02-3214	WT3309
T02-3217	WT3208
T02-3218	WT3410
T02-3223	WT3315
T02-3224	WT3311
T02-3228	WT3321
T02-3235	WT3215
T02-3236	WT3214
T02-3237	WT3305
T02-3301	WT3301
T02-3302	WT3302
T02-3304	WT3304
T02-3304W	WT3304W
T02-3307	WT3307
T02-3312	WT3308
T02-3314	WT3310
T02-3316	WT3314
T02-3317	WT3319
T02-3397	WT3418
T02-3398	WT3013
T02-3401	WT3401
T02-3402	WT3402
T02-3403	WT3403S
T02-3403K	WT3403
T02-3404	WT3404S
T02-3404K	WT3404
T02-3405	WT3405S
T02-3406	WT3421
T02-3407	WT3420
T02-3411	WT3434
T02-3415	WT3417
T02-3418	WT3422
T02-3421	WT3400
T02-3422	WT3435
T02-3423	WT3419
T02-3424	WT3432
T02-3425	WT3433
T02-3433	WT3406
T02-3434	WT3407
T02-3435	WT3429
T02-3436	WT3430
T02-3449	WT3453

KENWORTH CONTINUED

Part No	WATTS
T02-3451	WT3451
T02-3452	WT3452
T02-3455	WT3473
T02-3456	WT3466
T02-3457	WT3465
T02-3459	WT3464
T02-3460	WT3463
T02-3461	WT3460
T02-3462	WT3471
T02-3463	WT5049-NG
T02-3466	WT3458
T02-3468	WT3459
T02-3469	WT3457
T02-3470	WT3461
T02-3475	WT3470
T02-3480	WT3454
T02-3601	WT3131
T02-3603	WT3603
T02-5011	WT5012AS
T02-5016	WT5015AS
T02-5017	WT5013AS
T02-5018	WT5014AS
T02-5020	WT5020
T02-5021	WT5021
T02-5021-3	WT5021-3
T02-5024	WT5022
T02-5025	WT5028
T02-5027	WT5025
T02-5030	WT5030
T02-5032	WT5032
T02-5035	WT5042
T02-5036	WT5043
T02-5038	WT5036
T02-5045	WT5045
T02-5100	WT5100
T02-7378	WT3456L
T02-7379	WT3456
T03-1101	WT1101
T03-1101-P	WT1101U
T03-1102	WT1102
T03-1104	WT1104
T03-1105	WT1105
T03-1108	WT1103
T03-1120	WT1106
T03-1130	WT1107
T03-1134	WT1108

Part No	WATTS
T03-1201HD	WT1201
T03-1204	WT1202
T03-1208	WT1203
T03-1221	WT1205
T03-1225	WT1205S
T03-1301	WT1301
T03-1301-P	WT1301U
T03-1302	WT1302
T03-1303	WT1303
T03-1304	WT1304
T03-1305	WT1305
T03-1308	WT1308
T03-1309	WT1309
T03-1313	WT1306
T03-1314	WT1310
T03-1315	WT1311
T03-1401HD	WT1401
T04-0634	WT4026
T04-0635	WT4027
T04-1003	WT4003
T04-1006	WT4005
T04-4001	WT4001
T04-4002	WT4002
T04-4004	WT4063
T04-4005	WT4064
T04-4006	WT4006
T04-4007	WT4007
T044008	WT4008
T04-4009	WT4009
T04-4010	WT4010
T04-4011	WT4016
T04-4012	WT4012
T04-4013	WT4013
T04-4014	WT4014
T04-4016	WT4011
T04-4021	WT4021
T04-4023	WT4023
T04-4024	WT4020
T04-4024H	WT4020H
T04-4030	WT4035
T04-4032	WT4038
T04-4034	WT4028
T04-4041	WT4025
T04-4042	WT4024
T04-4062	WT4037
T04-4066	WT4017
T04-4067	WT4018
T04-4068	WT4019

Part No	WATTS
T04-4070	WT4039
T04-4071	WT4049
T04-4080	WT4524
T04-4085	WT4530
T04-4094	WT4059
T04-4095	WT4058
T04-4101	WT4535
T04-4507	WT4507
T04-4509	WT4527
T04-4510	WT4526
T04-4512	WT4532
T04-4513	WT4531
T04-4524	WT4536
T04-4IO2	WT4534
T04-6001	WT6001
T04-6002	WT6002
T04-6051	WT6051
T04-6051L	WT6051
T04-7505	WT4053
T04-7508	WT3431
T04-7509	WT4054
T04-8680	WT4007T

MERITOR

2210A5331SW	WT2034
2210A6345	WT2340
2210A7515	WT2312
2210A7645	WT2318
2210A7671	WT2324
2210B5332SW	WT2033
2210C5359SW	WT2032
2210C6399	WT2353
2210D5360SW	WT2031
2210D6400	WT2352
2210D6868	WT2359
2210D7492	WT2311
2210E5439	WT2303
2210E6869	WT2358
2210E7493	WT2310
2210F5440	WT2302
2210F6870	WT2335
2210G5545	WT2304
2210G6871	WT2334
2210H5546	WT2305
2210H7626	WT2084
2210J7628	WT2083
2210K7395	WT2301

CROSS REFERENCE LIST
FROM COMPETITORS TO WATTS PART NUMBERS

MERITOR CONTINUED

Part No	WATTS
2210K7473	WT2309
2210K7551	WT2315
2210L4328	WT2072
2210L7396	WT2300
2210L7474	WT2308
2210L7552	WT2314
2210M4329	WT2071

PROTEX

Part No	WATTS
BP1101	WT1101M
BP1101U	WT1101U
BP1102	WT1102
BP1103	WT1103
BP1104	WT1104
BP1105	WT1105
BP1106	WT1106
BP1110	WT1110
BP1112S	WT1112S
BP1165	WT1005
BP1194	WT1003
BP1195	WT1004C
BP1195C	WT1004C
BP1196	WT1002
BP1201	WT1201
BP1202	WT1202
BP1203	WT1203
BP1205	WT1205
BP1205S	WT1205S
BP1301	WT1301M
BP1301U	WT1301U
BP1302	WT1302
BP1303	WT1303
BP1304	WT1304
BP1305	WT1305
BP1306	WT1306
BP1308	WT1308
BP1309	WT1309
BP1310	WT1310
BP1311	WT1311
BP1401	WT1401
BP1999	WT1999
BP2000	WT2000
BP2001	WT2001
BP2002	WT2002
BP2003	WT2003
BP2003-4CT	WT2055
BP2004	WT2004
BP2005	WT2005
BP2006	WT2006
BP2007	WT2007
BP2008	WT2008
BP2009	WT2009
BP2010	WT2010
BP2011	WT2011
BP2012	WT2012
BP2013	WT2013
BP2014	WT2014
BP2015	WT2015
BP2016	WT2016
BP2017	WT2017
BP2018	WT2018
BP2019	WT2019
BP2020	WT2020
BP2021	WT2021
BP2022	WT2022
BP2023	WT2023
BP2024	WT2024
BP2025	WT2025
BP2026	WT2026
BP2027	WT2027
BP2028	WT2028
BP2029	WT2029
BP2030	WT2030
BP2031	WT2031
BP2032	WT2032
BP2033	WT2033
BP2034	WT2034
BP2035	WT2035
BP2036	WT2036
BP2037	WT2037
BP2038	WT2038
BP2039	WT2081
BP2040	WT2082
BP2041	WT2041
BP2042	WT2042
BP2043	WT2003F
BP2044	WT2004F
BP2045	WT2336
BP2046	WT2337
BP2047	WT2359
BP2048	WT2358
BP2049	WT2311
BP2050	WT2310
BP2051	WT2313
BP2052	WT2312
BP2055P	WT2055P
BP2057	WT2302
BP2058	WT2303
BP2059	WT2324
BP2060	WT2325
BP2061	WT2077
BP2062	WT2078
BP2063	WT2340
BP2064	WT2341
BP2065	WT2322
BP2066	WT2323
BP2067	WT2308
BP2068	WT2309
BP2069	WT2314
BP2070	WT2315
BP2071	WT2033
BP2072	WT2034
BP2073	WT2083
BP2074	WT2084
BP2075	WT2338
BP2076	WT2339
BP2077	WT2071
BP2078	WT2072
BP2079	WT2330
BP2080	WT2331
BP2081	WT2043
BP2082	WT2044
BP2083	WT2041
BP2084	WT2042
BP2085	WT2075
BP2086	WT2076
BP2087	WT2087
BP2088	WT2088
BP2089	WT2085
BP2090	WT2086
BP2091	WT2095
BP2092	WT2096
BP2093	WT2073
BP2094	WT2074
BP2097	WT2306
BP2098	WT2307
BP2099	WT2318
BP2100	WT2319
BP2101	WT2101
BP2102	WT2102
BP2103	WT2103

PROTEX CONTINUED

Part No	WATTS
BP2104	WT2104
BP2104B	WT2104B
BP2107	WT2107
BP21102	WT5015AS
BP21103	WT5012AS
BP2111	WT2111
BP2112	WT2046
BP2113	WT2045
BP2114	WT2351
BP2115	WT2350
BP2116	WT2335
BP2117	WT2334
BP2118	WT2305
BP2119	WT2304
BP2120	WT2353
BP2121	WT2352
BP2122	WT2357
BP2123	WT2356
BP2124	WT2333
BP2125	WT2332
BP2126	WT2347
BP2127	WT2346
BP2128	WT2301
BP2129	WT2300
BP2201	WT2201
BP2202	WT2202
BP2203	WT2203
BP2208	WT2208
BP2209	WT2209
BP2210	WT2210
BP22102	WT5014AS
BP22103	WT5013AS
BP2211	WT2211
BP2214	WT2214
BP2216	WT2216
BP2400	WT2327
BP2401	WT2326
BP3001	WT3001
BP3002	WT3002
BP3003-4	WT3003/4
BP3005SQ	WT3005SQ
BP3006	WT3006
BP3007	WT3007
BP3010	WT3010
BP3011	WT3011
BP3013	WT3013
BP3015	WT3015
BP3016	WT3016
BP3100	WT3100
BP3101	WT3101
BP3102	WT3102
BP3103	WT3103
BP3105	WT3105
BP3106	WT3106
BP3107	WT3107
BP3108	WT3108
BP3109	WT3109
BP3110	WT3110
BP3111	WT3111
BP3112	WT3112
BP3113	WT3113
BP3114	WT3114
BP3115	WT3115
BP3117	WT3117
BP3118	WT311B
BP3119	WT3119
BP3120	WT3120
BP3121	WT3121
BP3122	WT3122
BP3123	WT3123
BP3124	WT3124
BP3125	WT3125
BP3126	WT3126
BP3127	WT3127
BP3128	WT3128
BP3129	WT3129
BP3130	WT3130
BP3131	WT3131
BP3139	WT3139
BP3140	WT3140
BP3141	WT3141
BP3142	WT3142
BP3143	WT3143
BP3144	WT3144
BP3201	WT3201
BP3202	WT3202
BP3203	WT3203
BP3204	WT3204
BP3205	WT3205
BP3206	WT3206
BP3207	WT3207
BP3207B	WT3207B
BP3208	WT3208
BP3212	WT3212
BP3214	WT3214
BP3215	WT3215
BP3216	WT3216
BP3217	WT3217
BP3218	WT3218
BP3222	WT3345
BP3301	WT3301
BP3302	WT3302
BP3304	WT3304
BP33045	WT3304S
BP3304W	WT3304W
BP3305	WT3305
BP3307	WT3307
BP3308	WT3308
BP3309	WT3309
BP3310	WT3310
BP3311	WT3311
BP3314	WT3314
BP3315	WT3315
BP3319	WT3319
BP3320	WT3320
BP3321	WT3321
BP3330	WT3330
BP3331	WT3331
BP3332	WT3332
BP3334	WT3334
BP3346	WT3339
BP3400	WT3400
BP3401	WT3401
BP3402	WT3402
BP3403	WT3403
BP3403B	WT3403S
BP3404	WT3404
BP3404S	WT3404S
BP3405S	WT3405S
BP3406	WT3406
BP3407	WT3407
BP3410	WT3410
BP3417	WT3417
BP3418	WT3418
BP3419	WT3419
BP3420	WT3420
BP3421	WT3421
BP3422	WT3422
BP3424	WT3424
BP3425	WT3425
BP3429	WT3429
BP3430	WT3430

PROTEX CONTINUED

Part No	WATTS
BP3431	WT3431
BP3432	WT3432
BP3433	WT3433
BP3451	WT4351
BP3452	WT3452
BP3453	WT3453
BP3454	WT3454
BP3456L	WT3456L
BP3457	WT3457
BP3458	WT3458
BP3459	WT3459
BP3460	WT3460
BP3461	WT3461
BP3463	WT3463
BP3464	WT3464
BP3465	WT3465
BP3466	WT3466
BP3470	WT3470
BP3471	WT3471
BP3603	WT3603
BP4001	WT4001
BP4002	WT4002
BP4003	WT4003
BP4005	WT4005
BP4006	WT4006
BP4007	WT4007
BP4007T	WT4007T
BP4008	WT4008
BP4009	WT4009
BP4011	WT4011
BP4012	WT4012
BP4013	WT4013
BP4014	WT4014
BP4016	WT4016
BP4017	WT4017
BP4019	WT4019
BP4020	WT4020
BP4020H	WT4020H
BP4021	WT4021
BP4023	WT4023
BP4024	WT4024
BP4025	WT4025
BP4026	WT4026
BP40276	WT4027
BP4028	WT4028
BP4035	WT4035

Part No	WATTS
BP4037	WT4037
BP4038	WT4038
BP4039	WT4039
BP4049	WT4049
BP4053	WT4053
BP4054	WT4064
BP4063	WT4063
BP4064	WT4064
BP4010	WT4010
BP4018	WT4018
BP4507	WT4507
BP4524	WT4524
BP4526	WT4526
BP4527	WT4527
BP4530	WT4530
BP4531	WT4531
BP4532	WT4532
BP4534	WT4534
BP4535	WT4535
BP4536	WT4536
BP5020B	WT5020
BP5021	WT5021
BP5022B	WT5022B
BP5025B	WT5025
BP5028B	WT5028
BP5030	WT5030
BP5032	WT5032
BP5038	WT5036
BP5042	WT5042
BP5043	WT5043
BP5047	WT5047
BP5049	WT5049
BP5052	WT5052
BP5071	WT5076
BP5100	WT5100
BP6001	WT6001
BP6002	WT6002
BP6005	WT6005
BP6006	WT6006
BP6007	WT6007
BP6051L	WT6051
BP6051L	WT6051L
BP6054	WT6054
BP7004	WT3473
BP7027	WT5049Q
BP7038	WT2039
BP7039	WT2040
BP7040	WT2365

Part No	WATTS
BP7041	WT2366
BP7065	WT5061
BP7070	WT5047-95
BP7074	WT5058
BP7075	WT5067
BP7081	WT5071
BP7083	WT5062
BP7091	WT5066
BP7097	WT5069
BP7126	WT5057
BP7128	WT2361
BP7129	WT2360
BP7130	WT2343
BP7131	WT2342
BP7175	WT2344
BP7176	WT2345
BP7177	WT2348
BP7178	WT2349
BP7179	WT2362
BP7180	WT2363
BP7184	WT2317
BP7185	WT2316
BP9004	WT9004
BP9005	WT9005
BP9006	WT9006
BP9007	WT9007
BP9008	WT9008
BP9010	WT9010
BP9012	WT9012

OEM Part No	Manufacturer	Watts
70306	Eaton Drive Axle	WT2021
70307	Eaton Drive Axle	WT2022
305680	Trailer Axles	WT2005
305681	Trailer Axle	WT2006
807862	Eaton Drive Axle	WT2316
807863	Eaton Drive Axle	WT2317
10000087	Drive Axle	WT2019
10000088	Drive Axle	WT2020
21202754	Rockwell Axle	WT2036
21202755	Rockwell Axle	WT2035
21219321	BMX Axle	WT2347
21219322	BMX Axle	WT2346
2262026902	SAF Axle	WT2360
2262027002	SAF Axle	WT2361
2262110802	SAF Axle	WT2349
2262110902	SAF Axle	WT2348
2262111402	SAF Axle	WT2363
2262111502	SAF Axle	WT2362
2262150100	SAF Axle	WT2344
2262150200	SAF Axle	WT2345
0509705170	BPW Axle	WT2015
0509705180	BPW Axle	WT2016
0509705230	BPW Axle	WT2023
0509705240	BPW Axle	WT2024
0509705250/1	BPW Axle	WT2040
0509705260/1	BPW Axle	WT2039
0509705290	BPW Axle	WT2365
0509705300	BPW Axle	WT2366
202109-236-LH	IMT Axle	WT2009
202109-236-RH	IMT Axle	WT2010
2210A5331SW	Meritor Drive Axle	WT2034
2210A6345	Meritor Axle	WT2340
2210A7515	Meritor Drive Axle	WT2312
2210A7645	Meritor Drive Axle	WT2318
2210A7671	Meritor Drive Axle	WT2324
2210B5332SW	Meritor Drive Axle	WT2033
2210C5359SW	Meritor Drive Axle	WT2032
2210C6399	Trailer Axle	WT2353
2210D5360SW	Meritor Drive Axle	WT2031
2210D6400	Trailer Axle	WT2352

OEM Part No	Manufacturer	Watts
2210D6868	Trailer Axle	WT2359
2210D7492	Meritor Drive Axle	WT2311
2210E5439	Meritor Drive Axle	WT2303
2210E6869	Trailer Axle	WT2358
2210E7493	Meritor Drive Axle	WT2310
2210F5440	Meritor Drive Axle	WT2302
2210F6870	Trailer Axle	WT2335
2210G5545	Meritor Drive Axle	WT2304
2210G6871	Trailer Axle	WT2334
2210H5546	Meritor Drive Axle	WT2305
2210H7626	Meritor Drive Axle	WT2084
2210J7628	Meritor Drive Axle	WT2083
2210K7395	Mack Front Steer	WT2301
2210K7473	Meritor Drive Axle	WT2309
2210K7551	Meritor Drive Axle	WT2315
2210L4328	Trailer Axle	WT2072
2210L7396	Mack Front Steer	WT2300
2210L7474	Meritor Drive Axle	WT2308
2210L7552	Meritor Drive Axle	WT2314
2210M4329	Trailer Axle	WT2071
2210P7452	Meritor Drive Axle	WT2307
2210P7660	Meritor Drive Axle	WT2323
2210Q4333	Trailer Axle	WT2028
2210Q7453	Meritor Drive Axle	WT2306
2210Q7661	Meritor Drive Axle	WT2322
2210R4334	Trailer Axle	WT2027
2210S5323S	Meritor Drive Axle	WT2096
2210T5324S	Meritor Drive Axle	WT2095
2210V4182	Trailer Axle	WT2012
2210V7692	Meritor Drive Axle	WT2327
2210W2483	Trailer Axle	WT2004
2210W2484	Trailer Axle	WT2003
2210W4183	Trailer Axle	WT2011
2210W5353	Meritor Drive Axle	WT2014
2210W5939R	Meritor Drive Axle	WT2038
2210W7693	Meritor Drive Axle	WT2326
2210X5354	Meritor Drive Axle	WT2013
2210X5640S	Meritor Drive Axle	WT2037
2210Z6344	Meritor Axle	WT2341
2210Z7514	Meritor Drive Axle	WT2313

OEM Part No	Manufacturer	Watts
2210Z7644	Meritor Drive Axle	WT2319
2210Z7670	Meritor Drive Axle	WT2325
504723-17R	Trailer Axle	WT2082
504732-17L	Trailer Axle	WT2081
79790238/01L	York Axle	WT2332
79790238/01R	York Axle	WT2333
79790238/19L	York Axle	WT2350
79790238/19R	York Axle	WT2351
98-1210L	Mack Drive Axle	WT2077
98-1210R	Mack Drive Axle	WT2078
ACD2193-5	Fruehauf	WT2337
ACD2193-6	Fruehauf	WT2336
AXA0420-1	Fruehauf	WT2007
AXA0420-2	Fruehauf	WT2008
AXA0420-3	Fruehauf	WT2001
AXA0420-4	Fruehauf	WT2002
AXA0420-5	Fruehauf	WT2086
AXA0420-6	Fruehauf	WT2085
BRB7008L	Trailer Axle	WT2330
BRB7008R	Trailer Axle	WT2331
M12WK100-1	Trailer Axle	WT2339
M12WK101-1	Trailer Axle	WT2338
M16WK102-25	Trailer Axle	WT2004F
M16WK103-25	Trailer Axle	WT2003F
M16WK110-12	Trailer Axle	WT2044
M16WK111-12	Trailer Axle	WT2043
M16WKL25-236	Trailer Axle	WT2342
M16WKR25-236	Trailer Axle	WT2343
R607067	Trailer Axle	WT2357
R607068	Trailer Axle	WT2356
S-24636-1L	Hendrickson	WT2045
S-24636-1R	Hendrickson	WT2046

CAMSHAFT OEM CROSS REFERENCE

WATTS RECOMMENDED STOCKIST LIST

Part Number	Description - Brief
23079	BUSH - CAM TUBE/ENCLOSURE IMT
24957	CASTING - ROCKER VE50TD +2.4T
53004	D/BAR EYE BUSH 50MM SPLIT
53005	50MM SOLID BUSH-TOW EYE
WT1004C	EQUALISER ROCKER
WT1005	EQUALISER ROCKER 8'1" SPREAD
WT1007	EQUALISER ROCKER-FRUEHAUF PROPAR
WT1013	EQUALISER ROCKER-FRUEHAUF PROPAR
WT1014	EQUALISER ROCKER-FREIGHTER VA35 & TAA35
WT1015	EQUALISER ROCKER-YORK,TMC,COLRAIN
WT1016	EQUALISER ROCKER-YORK,TMC,COLRAIN
WT1017	EQUALISER ROCKER-FREIGHTER VE50
WT1019	EQUALISER ROCKER-FREIGHTER VE50
WT1101	BUSH EQUALISER MULLINS
WT1101M	BUSH EQUALISER - WATTS
WT1101U	BUSH EQUALISER POLYURETHANE
WT1119	PIVOT BUSH KIT SUIT YORK FB suspension
WT1120	PIVOT PIN ASSY SUIT YORK FB suspension
WT1201	EQUALISER PIN ASSY
WT1201KIT	EXTREME HEAVY DUTY PIN KIT
WT1301	TORQUE ROD BUSH - MULLINS
WT1301M	BUSH TORQUE ROD - WATTS
WT1301U	T/ROD GP TAPER POLY URETHANE BUSH
WT1308	TORQUE ROD BUSH
WT1311	TORQUE ROD BUSH REYCO
WT1312	T/ROD BUSH H/D VERSION WT 1308
WT1401	TORQUE ROD PIN & NUT
WT1401KIT	EXTREME HEAVY DUTY PIN KIT
WT1405	TORQUE ROD PIN&NUT TAA35
WT1810	BPW 325-496MM 24MM EYE
WT1811	KRUEGER, ROR 21224745
WT1812	BPW 474-800MM, 24MM EYE
WT1813	HENDRICKSON HT23, INTRAAX
WT1814	HENDRICKSON INTRAAX 21699
WT1815	SAF INTRADISC, 20MM EYE
WT2001	S/CAM LH 37SP 21-1/8 FRUE 1.5
WT2002	S/CAM RH 37SP 21-1/8 FRUE 1.5
WT2003	S/CAM LH 10SP 20-3/8 GP 1.1
WT2003F	S/CAM LH 10SP 23-1/2 GP W/AIR
WT2004	S/CAM RH 10SP 20-3/8 GP 1.1
WT2004F	S/CAM RH 10SP 23-1/2 GP W/AIR
WT2007	S/CAM LH 37SP 16-1/8 FRUE SHO
WT2008	S/CAM RH 37SP 16-1/8 FRUE SHO
WT2009	S/CAM L/H 19.5 AXLE 10 SP
WT2010	S/CAM R/H 19.5 AXLE 10 SP
WT2023	S/CAM 10SP 575MM /LH BPW NEW G
WT2024	S/CAM 10SP 575MM /RH BPW NEW G
WT2025	S/CAM 10SP 21-1/8 LH FREIGH L
WT2026	S/CAM 10SP 21-1/8 RH FREIGH L
WT2031	S/CAM 10SP 11-1/2 LH R/WELL D
WT2032	S/CAM 10SP 11-1/2 RH R/WELL D
WT2033	S/CAM 28SP 11-1/2 LH R/WELL D
WT2034	S/CAM 28SP 11-1/2 RH R/WELL D
WT2039	S/CAM 10SP 600MM /LH BPW N/GEN
WT2040	S/CAM 10SP 600MM /RH BPW N/GEN
WT2045	S/CAM L/H Q-PLUS INT (HXS-S-24

Part Number	Description - Brief
WT2046	S/CAM R/H Q-PLUS INT (HXS-S-24
WT2047HD	CAMTUBE KIT HEND 98933-014
WT2048	CAMSHAFT BUSH KIT ROR/MERI Q-Q
WT2050	CAMTUBE BPW NEW GEN 510MM
WT2050L	CAMTUBE BPW NG AIRBAG 537MM
WT2050P	PLATE CAMTUBE BPW
WT2051	CAMTUBE BPW OLD GEN 457MM
WT2053	CAMTUBE FRUEHAUF 520MM
WT2053P	PLATE CAMTUBE FRUEHAUF
WT2054/457	CAMTUBE FRUEHAUF LONG 457MM
WT2055	CAMTUBE GENERAL PURPOSE
WT2055L	CAMTUBE GENERAL PURPOSE AIRBAG
WT2055P	PLATE CAMTUBE GENERAL PURPOSE
WT2059	CAMTUBE YORK AIRBAG 554MM
WT2067	S/CAM LH IMT
WT2068	S/CAM RH IMT
WT2077	S/CAM 28SP 9-1/4 LH MACK DRIVE
WT2078	S/CAM 28SP 9-1/4 RH MACK DRIVE
WT2081	S/CAM 10SP 24-3/16 LH YORK Air Bag
WT2082	S/CAM 10SP 24-3/16 RH YORK Air Bag
WT2083	S/CAM 28SP 14-1/8 Q PLUS (LH)
WT2084	S/CAM 28SP 14-1/8 Q PLUS (RH)
WT2086	S/CAM 37SP 23-7/8 RH FRUEHAUF
WT2101	CAMBUSH ASSY GP
WT2102	CAMBUSH ASSY PROPAR
WT2103	BUSH ASSY SPHERICAL PROPAR
WT2107	CAMBUSH ASSY STD FORGE
WT2201	CAMBUSH ASSY GP
WT2202	CAMBUSH ASSY GP
WT2203	CAMBUSH ASSY PROPAR
WT2209	CAMBUSH ROCKWELPINK BUSH
WT2209B	CAMBUSH SINTERED BRONZE
WT2430	BRAKE B0OSTER 24/30
WT3001	CAMBUSH BRACKET PROPAR
WT3005SQ	SQUARE CAM/BRKT ASSY
WT3006	CAMBUSH
WT3007	O-RING
WT3030	BRAKE BOOSTER 30/30
WT3100	CAM CIRCLIP 1 5/8
WT3101	D-WASHER
WT3102	CAM SPACER WASHER
WT3103	CAM SPACER WASHER
WT3104	CAM SPACER WASHER
WT3105	CAM SPACER WASHER
WT3107	CAM CIRCLIP 1 1/2 EXTERNAL
WT3108	CAM WASHER KIT
WT3109	CAM WASHER KIT
WT3111	CAM WASHER KIT
WT3113	CAMSHAFT SEAL
WT3122	CAMSHAFT SEAL
WT3123	CAMSHAFT SEAL ROCKWELL
WT3203	ANCHOR PIN WASHER 1 1/4 x 1 7/8 x 1/16"
WT3207	A/PIN BUSH STAINLESS STEEL
WT3207BM	ANCHORPIN BUSH BI-METAL
WT3213	ANCHORPIN BUSH ROCKWELL
WT3302U	SUPPORT WASHER UNPLATED

Part Number	Description - Brief
WT3304	ANCHOR PIN ASSY (BODY 2-13/16")
WT3304BLT	4X3/8UNC BOLT(WT3304&WT3304M)
WT3304L	ANCHOR PIN ASSY (BODY 3 3/16)
WT3304S	ANCHOR PIN ASSY (BODY 2 1/4)
WT3304W	WASHER
WT3305	ANCHOR PIN Q Plus ROCKWELL
WT3306	ANCHOR PIN (XEM)1 1/16FRUE HA
WT3306	ANCHOR PIN (XEM)1 1/16FRUE HA
WT3307	ANCHOR PIN (XEM)FRUEHAUF
WT3319	ANCHOR PIN NEW BPW
WT3331	Rockwell GP hardware - standard anchor pin
WT3331Y	York Hardware Kits - Long Return Spring
WT3332	Rockwell GP hardware - Bi-Metal, inc washers
WT3332SS	Rockwell GP Hardware kit QC & Q Plus, S/S
WT3333	Meritor Hardware kit QC & Q Plus, Bi-Metal
WT3333SS	Meritor Hardware kit QC & Q Plus, S/Steel
WT3337	BPW New Generation Hardware Kit 420X180
WT3338	BPW BRAKE 95 HARDWARE KIT 420X180
WT3339	SAF J Series Hardware Kit 420X180 P Type
WT3340	EATON ES11 Hardware Kit
WT3341	BPW BRAKE 95 HARDWARE KIT 360X200
WT3401	RETAINER CAMROLLER GP
WT3403	CAMROLLER STD.KNURLED
WT3403S	CAMROLLER STD.SMOOTH
WT3404	CAMROLLER 1/8 OS KNURLED
WT3404S	CAMROLLER 1/8 OS SMOOTH
WT3405	CAMROLLER 1/4 OS KNURLED
WT3417	BOLT ON ROLLER RETAINER
WT3417M	KIT-RETAINER
WT3418	CAMROLLER RETAINER Q.BRAKE
WT3419	CAMROLLER EATON B2011
WT3420	CAMROLLER SHAFT EATON
WT3421	CAMROLLER EATON 39074
WT3429	BPW CAMROLLER NEW GENERATION
WT3432	CAM ROLER STD. FORGE
WT3434	ROLLER PIN DANA
WT3436	ROLLER STD. DANA 15"
WT3451	H.D. RETURN SPRING
WT3452M	RETAINER PIN GP
WT3453	RETURN SPRING
WT3453M	RETURN SPRING
WT3454	RETURN SPRING
WT3456	RETURN SPRING
WT3456-L	BPW SLACK RETURN SPRING-LON
WT3458	RETAINER PIN
WT3459	RETURN SPRING
WT3463	RETURN SPRING EATON
WT3466	RETURN SPRING EATON E34 LOW LOADER
WT3470	RETURN SPRING NEW BPW
WT3471	RETURN SPRING STD.FORGE
WT3473	RETURN SPRING DANA/STD FORGE
WT3476	BPW 95 RETURN SPRING
WT3477	RETURN SPRING B95 HOOKED
WT3478	RETURN SPRING B95 STRAIGHT
WT4006	AXLE NUT OUTER G.P
WT4007T	GP AXLE TAB WASHER

Part Number	Description - Brief
WT4008	AXLE NUT INNER G.P
WT4016	AXLE NUT KIT WT4006/7/8
WT4058	AXLE NUT KIT - YORK
WT4059	AXLE NUT KIT - ROR, Rockwell
WT4063	AXLE NUT NEW TYPE FRUEHAUF
WT4065	AXLE NUT KIT - FRUEHAUF
WT4507	SEAL-OIL
WT4530	SEAL CARRIER NEW BPW
WT4534	OIL SEAL CARRIER NEW BPW
WT4536	OIL SEAL NEW BPW HUB
WT5011AS	10 SPLINE 5-6-7 AUTO SLACK GP
WT5012AS	10 SPLINE 5 -6 AUTO SLACK GP
WT5013AS	28 SPLINE 5 -6 AUTO SLACK
WT5014AS	28 SPLINE 5.5 -6.5 AUTO SLACK
WT5016AS	10 SPLINE 5.5 -6.5 AUTO SLACK
WT5020	SLACK ADJUSTER G.P
WT5020HD	H/D GP SLACK ADJUSTER 19MM NUT
WT5020MLO	S/ADJUSTER SUIT MACK LOCKON
WT5021	SLACK ADJ 37/6 /1.62CAM FRUE PROPAR
WT5021-3	FRU 3 HOLE SLACKADJUSTER
WT5021-3HD	S/ADJUSTER FRUEHAUF 37SP/3HOL
WT5022	SLACK ADJUSTER BPW/HR1266-19FC
WT5022AS	AUTO SLACK - BPW (PAIR)
WT5023	S/ADJUSTER 5.5 +6.5 10 SPLINE
WT5023HD	S/ADJUSTER (1202-19) H/DUTY
WT5024	S/ADJUSTER R/WELL 5.5 - 6.5 28
WT5024HD	S/ADJUSTER R/WELL 19MM ADJ NUT
WT5025	S/ADJUSTER 5 6 +7 28 SPLINE
WT5025HD	S/ADJUSTER R/WELL 19MM ADJ NUT
WT6001	WHEEL STUD GP 3 X 3/4
WT6002	WHEEL NUT 3/4 GEN.PURPOSE
WT6003	WHEEL STUD MCGRATH
WT6004	WHEEL NUT MCGRATH
WT6005	WHEEL STUD MK V FREI 3 1/2 x 3
WT6006	WHEEL NUT MK V FREI 1 1/8 x 3
WT6007	MALCO WHEEL STUD
WT6019	WHEEL NUT
WT6031	5/8 WHEELSTUD
WT6032	5/8 WHEELNUT BK
WT6040	BPW STUD ISO THREAD 22MM X 1.5
WT6051	RIM CLAMP GP.TRAILER (2 7/8"
WT6054	RIM CLAMP MCGRATH 29x75x62x16
WT6056	RIM CLAMP 4x1 5/16x3/4 TF61
WT6057	RIM CLAMP MALCO 4x1x3/4 TF62
WT6058	RIM CLAMP 2 7/8x1 1/2x3/4
WT6059	RIM CLAMP 2 1/2x1/2x3/4
WT6068	RIM CLAMP GP FRONT TF75
WT6764	SPACER - CORR 4.25 X 20 SILVE
WT7131	RINGFEEDER - MAJOR REPAIR KIT
WT7137	RINGFEEDER - PIN & SPRING KIT
WT9004	REPAIR KIT - CAMSHAFT
WT9017	MACK DRIVE AXLE KIT 1 WHEEL
WT9601	LUBELINER ROUND
WT9601KIT	LUBELINER & WASHER KIT
WT9602	WASHER LUBELINER REPLACEMENT

METRIC CONVERSION TABLE

INCH	INCH	MM
1/64	0.156	0.397
1/32	0.313	0.794
3/64	0.469	1.191
1/16	0.0625	1.587
5/64	0.781	1.984
3/32	0.938	2.381
7/64	0.1094	2.778
1/18	0.125	3.175
9/64	0.1406	3.572
5/32	0.1563	3.969
11/64	0.1719	4.366
3/16	0.1875	4.762
13/64	0.2031	5.159
7/32	0.2188	5.556
15/64	0.2344	5.953
1/4	0.254	6.35
17/64	0.2656	6.747
9/32	0.2813	7.144
19/64	0.2969	7.541
5/64	0.3125	7.937
21/64	0.3281	8.334
11/32	0.3438	8.731
23/64	0.3594	9.128
3/8	0.375	9.525
25/64	0.3906	9.922
13/32	0.4063	10.319
27/64	0.4219	10.716
7/16	0.4375	11.113
29/64	0.4531	11.509
15/32	0.4688	11.906
31/64	0.4844	12.303
1/12	0.5	12.7

INCH	INCH	MM
33/64	0.5156	13.097
17/32	0.5313	13.494
35/64	0.5469	13.89
9/16	0.5625	14.287
37/64	0.5781	14.684
19/32	0.5938	15.081
39/64	0.6094	15.478
5/8	0.625	15.875
41/64	0.6406	16.272
21/32	0.6563	16.669
43/64	0.6719	17.065
11/16	0.6875	17.462
45/64	0.7031	17.859
23/32	0.7188	18.265
47/64	0.7344	18.653
3/4	0.75	19.05
49/64	0.7656	19.447
25/32	0.7813	19.884
51/64	0.7969	20.24
13/16	0.8125	20.637
53/64	0.8281	21.034
27/32	0.8438	21.431
55/64	0.8594	21.828
7/8	0.875	22.225
57/64	0.8906	22.622
29/32	0.9063	23.019
59/64	0.9219	23.415
15/16	0.9375	23.812
61/64	0.9531	24.209
31/32	0.9688	24.606
63/64	0.9844	25.003
1	1.00	25.4

DISCLAIMER

All photographs & schematic drawings in this catalogue are illustrated to aid product identification. The product supplied may not be of the same manufacture as that of the corresponding image and therefore may be slightly different in appearance.

Original Equipment Manufacturers part numbers and names are given for reference and identification purposes only. In no case does Watts Friction Plus Australasia imply that the parts offered are original equipment. Every effort is made to ensure that the information in this catalogue is correct at the time it was published, however Watts Friction Plus Australasia cannot be held responsible for any errors inadvertently made.

The catalogue does not constitute a specification or description of the Goods and is an illustrative guide only. The Seller shall be under no liability for variances between the catalogue description and Goods supplied. Watts Friction Plus Australasia cannot accept any damages or consequential costs arising from fitting the incorrect part. It is the fitter's responsibility to ensure that the correct part has been supplied and that all components being fitted match the parts being replaced.

WARRANTIES

Watts Friction Plus Australasia warrants that the goods are guaranteed for 12 months or (20 000Kms) from date of fitment. WFPA shall be under no liability whatever to the Buyer for any indirect loss and/or expense (including loss of profit) suffered by the Buyer arising out of a breach of contract by the Seller. In the event of any breach of contract by the Seller the remedies of the Buyer shall be limited to damages. Under no circumstances shall the liability of the Seller exceed the price of the Goods.

TRADEMARKS

The Watts and Bremsbelage logos are registered trademarks of Watts Friction Plus Australasia.

The Textar and Don logos are registered trademarks of TMD Friction Group, Germany.

WattsFrictionPlus
AUSTRALASIA

T. 1800 678 257 F.1800 678 278
enquiries@wattsfpa.com.au
7 EW Pitts Avenue
Po Box 2489 Dry Creek SA 5094
www.wattsfpa.com.au

DISTRIBUTED BY

Designed and Produced by Design Corp www.designcorp.net.au
Part No. WTC001